TOWN OF FLORENCE
REGULAR MEETING AGENDA

Mayor Tara Walter
Vice-Mayor John Anderson
Councilmember Bill Hawkins
Councilmember Karen Wall
Councilmember Kristen Larsen
Councilmember Michelle Cordes
Councilmember Judy Hughes

Florence Town Hall
775 N. Main Street
Florence, AZ 85132
(520) 868-7500
www.florenceaz.gov
Meet 1st and 3rd Mondays

6:00 PM

Monday, April 1, 2019

Pursuant to A.R.S. § 38-431.02, notice is hereby given to the Town of Florence Council and to the general public that a Regular Meeting of the Florence Town Council will be held on Monday, April 1, 2019, at 6:00 p.m., in the Florence Town Council Chambers, located at 775 N. Main Street, Florence, Arizona. The agenda for this meeting is as follows:

1. **CALL TO ORDER**

2. **ROLL CALL: Tara Walter __, John Anderson__, Bill Hawkins__, Karen Wall____, Kristen Larsen___, Michelle Cordes__, Judy Hughes ___.**

3. **MOMENT OF SILENCE**

4. **PLEDGE OF ALLEGIANCE**

5. **CALL TO THE PUBLIC** Call to the Public for public comment on issues within the jurisdiction of the Town Council. Council rules limit public comment to three minutes. Individual Councilmembers may respond to criticism made by those commenting, may ask staff to review a matter raised or may ask that a matter be put on a future agenda. However, members of the Council shall not discuss or take action on any matter during an open call to the public unless the matters are properly noticed for discussion and legal action.

6. **PUBLIC HEARING AND PRESENTATION**

   a. Public Hearing to receive citizen's comments on rezoning from Neighborhood Office (NO) to Highway Business (B-2) for 470 South Main Street, Florence, Arizona, APN 202-09-0010; and second reading of Ordinance No. 671-19: Discussion/Approval/Disapproval of AN ORDINANCE OF THE TOWN OF FLORENCE, PINAL COUNTY, ARIZONA, APPROVING THE HIGHWAY BUSINESS COMMERCIAL (B-2) ZONE CHANGE LOCATED AT 470 SOUTH MAIN STREET, APN 202-09-0010 (PZ-19-15). (Larry Harmer)

   b. Proclamation declaring the week of April 7 - 13, 2019 as National Library Week in the Town of Florence. (Mayor Walter)

   c. Proclamation declaring April 2019 as Promise for the Future Month. (Mayor Walter)

7. **CONSENT: All items on the consent agenda will be handled by a single vote as part of the consent agenda, unless a Councilmember or a member of the public objects at the time the agenda item is called**.

   a. Approval of an amendment to the Professional Services Agreement with Lantis Productions, Inc. (dba Lantis Fireworks and Lasers) increasing the total contract to $36,000. (Bryan Hughes)

   b. Approval of a contract with Zumar Industries Inc. to purchase various street, warning and informational signs as well as poles and pole accessories for all signage within the Town of Florence Town limits using the MCDOT Co-operative Contracts, Serial 16136-C and Serial 14105-C, in an amount not to exceed of $60,000 (include a ratification of $29,338.02). (Chris Salas)

   c. Proclamation declaring April 2019 as Fair Housing Month. (Jennifer Evans)

   d. Approval of accepting the register of demands ending February 28, 2019, in the amount of $2,258,477.17. (Becki Guilin)

8. NEW BUSINESS

   a. Resolution No. 1692-19: Discussion/Approval/Disapproval of A RESOLUTION OF TOWN OF FLORENCE, PINAL COUNTY, ARIZONA, APPROVING AND AUTHORIZING MAYOR TARA WALTER, TOWN MANAGER BRENT BILLINGSLEY, AND INTERIM FINANCE DIRECTOR BECKI JIMENEZ TO ACT AS SIGNATORIES FOR THE TRANSACTION OF BUSINESS ON THE TOWN OF FLORENCE BANKING ACCOUNTS, AND DECLARING AN EMERGENCY. (Lisa Garcia)

   b. Discussion/Approval/Disapproval to modify the existing contract with Apache Underground, utilizing Pine-Strawberry Waterline Replacement and Water Facilities Improvement Construction Work – Job Order Contract, dated October 18, 2018, for CIP WU-38 Water line replacement, in an amount not to exceed $1,314,779.20. (Chris Salas)

9. LEGISLATIVE UPDATE

10. MANAGER'S REPORT

11. DEPARTMENT REPORTS

   a. Community Development
   b. Community Services
   c. Courts
   d. Finance
   e. Fire
   f. Police
   g. Public Works

12. CALL TO THE PUBLIC

13. CALL TO THE COUNCIL – CURRENT EVENTS ONLY

14. ADJOURNMENT TO EXECUTIVE SESSION

For the purposes of discussions or consultations with designated representatives of the public body and/or legal counsel pursuant to A.R.S. Sections 38-431.03 (A)(1)(A)(3), (A)(4) and (A)(7) to consider its position and instruct its representatives and/or attorneys regarding:

a. Town's position and instruct its attorneys regarding Arizona Department of Environmental Quality proceedings, related to Water Quality Appeals Board Case No. 16-002, including appellate proceedings to reviewing courts.
b. Town's position and instruct its attorneys regarding pending litigation in Maricopa County Superior Court: Town of Florence v. Florence Copper, Inc. CV2015-000325.
c. Town's position and instruct its attorneys regarding pending litigation in Maricopa County Superior Court: Town of Florence v. Florence Copper, Inc. CV2015-000325 including those actions related to said litigation as authorized by Ordinance. No. 592-13.
d. Town's position and instruct its attorneys regarding pending litigation in Pinal County Superior Court: Johnson Utilities, LLC, v. Town of Florence S-1100-CV-201900383 including those actions related to said litigation.
e. Town Council duties and responsibilities in a Town Manager-Council form of government.

15. ADJOURNMENT FROM EXECUTIVE SESSION

16. ADJOURNMENT

Council may go into Executive Session at any time during the meeting for the purpose of obtaining legal advice from the Town's Attorney(s) on any of the agenda items pursuant to A.R.S. § 38-431.03(A)(3). One or more members of Council may appear for part or all of the meeting including Executive Session telephonically.

POSTED ON MARCH 27, 2019, BY MARIA HERNANDEZ, DEPUTY TOWN CLERK, AT 775 NORTH MAIN STREET, FLORENCE, ARIZONA, AND AT WWW.FLORENCEAZ.GOV.

*****PURSUANT TO TITLE II OF THE AMERICANS WITH DISABILITIES ACT (ADA), THE TOWN OF FLORENCE DOES NOT DISCRIMINATE ON THE BASIS OF DISABILITY REGARDING ADMISSION TO PUBLIC MEETINGS. PERSONS WITH A DISABILITY MAY REQUEST REASONABLE ACCOMMODATIONS BY CONTACTING THE TOWN OF FLORENCE ADA COORDINATOR, AT (520) 868-7574 OR (520) 868-7502 TDD. REQUESTS SHOULD BE MADE AS EARLY AS POSSIBLE TO ALLOW TIME TO ARRANGE THE ACCOMMODATION.*****

	TOWN OF FLORENCE COUNCIL ACTION FORM	**AGENDA ITEM 6a.**

MEETING DATE: April 1, 2019

DEPARTMENT: Community Development

STAFF PRESENTER: Larry C. Harmer
Community Development Director

SUBJECT: Ordinance No. 671-19: Rezoning from Neighborhood Office (NO) to Highway Business (B-2) for 470 South Main Street (PZ-19-15) Public Hearing

☒ **Action**
☐ **Information Only**
☒ **Public Hearing**
☐ **Resolution**
☒ **Ordinance**
- ☐ **Regulatory**
- ☐ **1st Reading**
- ☒ **2nd Reading**

☐ **Other**

STRATEGIC PLAN REFERENCE:

☒ Community Vitality ☐ Economic Prosperity ☒ Leadership and Governance
☐ Partnerships and Relationships ☐ Transportation and Infrastructure
☐ Statutory ☐ None

RECOMMENDED MOTION/ACTION:

Public Hearing to receive citizen's comments on rezoning from Neighborhood Office (NO) to Highway Business (B-2) for 470 South Main Street, APN 202-09-0010; and adoption of Ordinance No. 671-19: AN ORDINANCE OF THE TOWN OF FLORENCE, PINAL COUNTY, ARIZONA, APPROVING THE HIGHWAY BUSINESS COMMERCIAL (B-2) ZONE CHANGE LOCATED AT 470 SOUTH MAIN STREET, APN 202-09-0010 (PZ-19-15).

OVERVIEW:

The property owner is desirous of establishing zoning on his property that is better suited to the existing use and to the orientation of the property to the 'business route' designation of Highway 79/South Main Street. The existing structure contains three suites; one of which is currently occupied by a barber shop. The reaming two suites are available for lease.

The Town 2020 General Plan shows Land Use categories as non-site specific, allowing flexibility of underlying zoning. The subject parcel is generally designated as Downtown Mixed Use (DMU) in the General Plan. The DMU designation is primarily intended to assist with the revitalization of older areas and to provide for a mix of highway-oriented retail goods and commercial services for commuters, workers and residents.

Analysis:

The proposed rezoning site consists of one parcel. It is situated fronting Main Street, also known as Business Loop State Route 79. The lot is currently zoned Neighborhood Office (NO). The properties in immediately adjacent to the subject parcel are zoned as follows:

- North across 20th Street – Highway Business Commercial (B-2)
- East across Main Street – Highway Business Commercial(B-2)
- South – Neighborhood Office (NO)
- West across the alley – Single-Family Residential (R1-6) (Note that this property is owned by the Town of Florence and contains the historic Florence Water Tower.)

FINDINGS:

Staff offers the following findings for the consideration of the Planning and Zoning Commission and Town Council:

1. The proposed zoning is consistent with the Town of Florence 2020 General Plan, specifically the Downtown Mixed Use (DMU) designation.

2. The proposed zoning and development of the site should facilitate ongoing revitalization and redevelopment efforts along Main Street and Business Loop State Route 79 Corridor.

PUBLIC PARTICIPATION:

A notice for the Planning and Zoning Commission and Town Council Public Hearings was mailed to all property owners within three hundred (300) feet of the site. Property posting for notice of public hearings was posted on site and advertisements in the local paper per Town requirements. Under Arizona Revised Statutes, Title 9, Section-462.04 and Town of Florence Development Code, a public hearing is required for a Zone Change.

A Citizen Participation meeting was held on February 28 at the Town of Florence Community Development Building at 224 West 20th Street. Staff notes that as of this writing, no public comments have been received.

The tentative Planning and Zoning Commission/Town Council meeting schedule for this application is as follows:

March 7, 2019	Planning and Zoning Public Hearing
March 18, 2019	Town Council Public Hearing and 1st Reading
April 1, 2019	Town Council Public Hearing and Action

All public hearings will be held at Town Hall Council Chambers – 775 North Main Street, Florence, Arizona 85132.

FINANCIAL IMPACT:

Approval of the rezoning request will broaden the scope of potential sales tax producing uses available to be placed on the property.

RECOMMENDATION:

The Planning and Zoning Commission finds that the proposed Zone Change for APN (PZ-15-17-ZC) is in compliance with the Town's 2020 General Plan and therefore recommends that a favorable recommendation be forwarded to the Town Council for this Zone Change, subject to the following conditions:

1. The development of the subject site shall be in conformance to any applicable Town Codes and Ordinances.

2. Property owners agree to waive claims for diminution in value pursuant to Proposition 207 [A.R.S. § 12-1134] pursuant to the blank waiver attached hereto as Exhibit B.

3. Any additional conditions deemed necessary by the Planning and Zoning Commission.

ATTACHMENTS:

- Ordinance No. 671-19

- Exhibit “A”
- Staff Report
- Power Point Presentation

ORDINANCE NO. 671-19

AN ORDINANCE OF THE TOWN OF FLORENCE, PINAL COUNTY, ARIZONA, APPROVING THE HIGHWAY BUSINESS COMMERCIAL (B-2) ZONE CHANGE LOCATED AT 470 SOUTH MAIN STREET, APN 202-09-0010 (PZ-19-15).

WHEREAS, a request to change the existing zoning on the subject properties from Neighborhood Office (NO) to Highway Business (B-2) has been proposed and a public hearing has been held by the Planning and Zoning Commission; and

WHEREAS, the Planning and Zoning Commission has found the Zone Change is in conformance with the 2020 Town's General Plan; and

WHEREAS, the Planning and Zoning Commission has forwarded the Mayor and Council of the Town of Florence, Arizona, a favorable recommendation for the Zone Change, subject to certain conditions; and

WHEREAS, said proposal has been considered by the Mayor and Council of the Town of Florence, Arizona, and the recommended Zone Change has been found to be appropriate and further found to promote the health, safety and welfare of the residents of the Town and its orderly growth.

NOW, THEREFORE BE IT RESOLVED by the Mayor and Council of the Town of Florence, Arizona, as follows:

The Zoning Map of Florence Arizona is hereby amended by changing the zoning classification of the parcels of land depicted on EXHIBIT A attached hereto, from Neighborhood Office (NO) to Highway Business Commercial (B-2), subject to the following conditions:

1. The development of the subject site, as described in Exhibit A attached, shall be in conformance to any applicable Town Codes and Ordinances.

2. Property owners agree to waive claims for diminution in value pursuant to Proposition 207 [A.R.S. § 12-1134] pursuant to the waivers attached hereto as Exhibit B.

PASSED AND ADOPTED by the Mayor and Council of the Town of Florence this1st day of April 2019.

_____
Tara Walter, Mayor

ATTEST:

_____
Lisa Garcia, Town Clerk

APPROVED AS TO FORM:

_____
Clifford L. Mattice, Town Attorney

EXHIBIT A

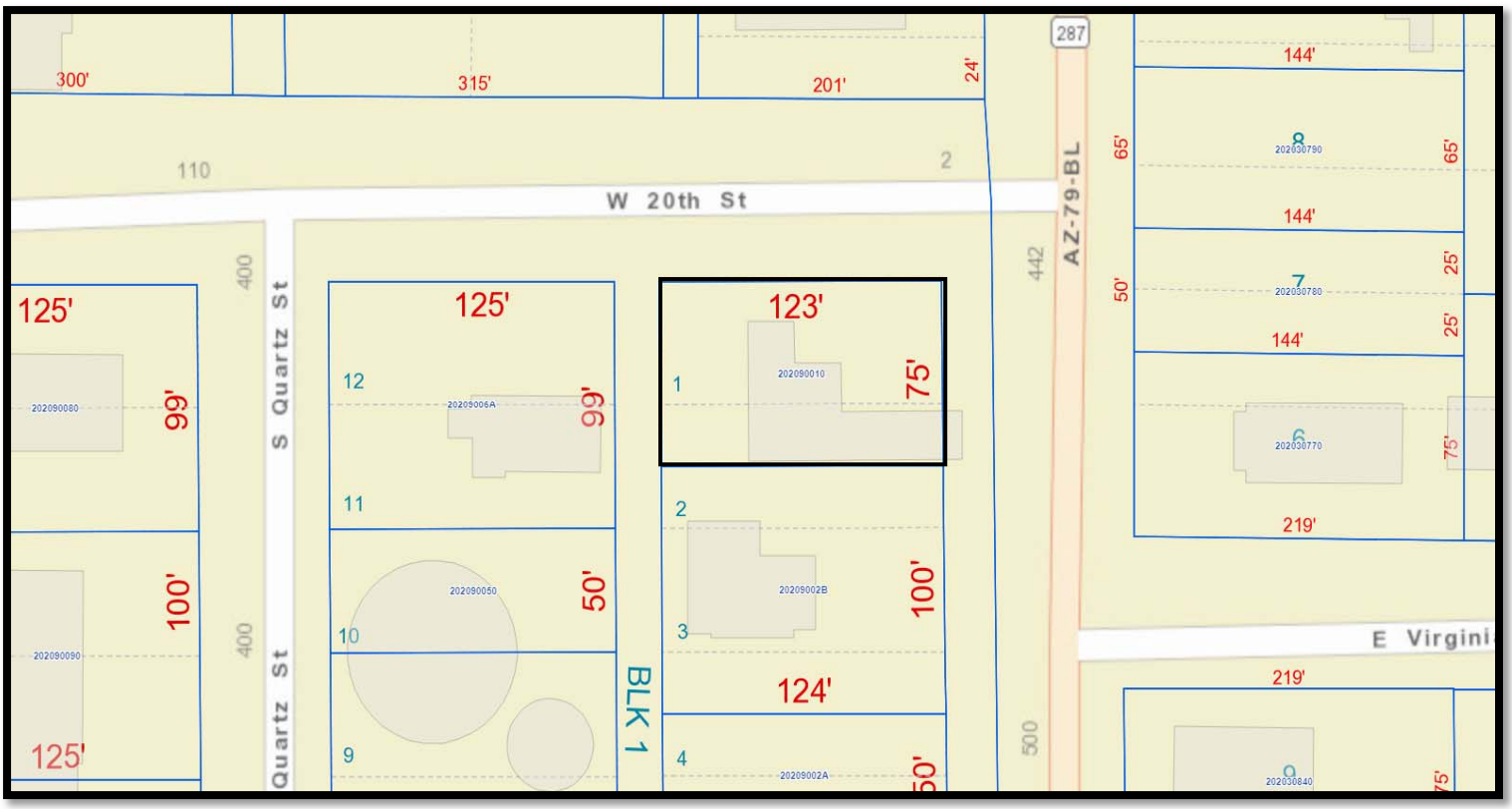

470 South Main Street, APN 202-09-0010 (PZ-19-15)

Changing the zoning classification of the parcels of land depicted on Exhibit A from Neighborhood Office (NO) to Highway Business (B-2).

Planning and Zoning Commission
Staff Report

March 7, 2019
Agenda Item 5A

Project Name: **Celaya Zone Change**

PZ-19-15

Prepared By: **Larry Harmer**

Community Development Director

REQUEST:

A Zone Change request by Alfred Celaya to change the zoning on approximately .21 acres, located at the southwest corner of Main Street and 2th Street, from Neighborhood Office (NO) to Highway Business Commercial Zoning District (B-2). (APN 202-09-0010).

BACKGROUND:

The property owner is desirous of establishing zoning on his property that is better suited to the existing use and to the orientation of the property to the 'business route' designation of Highway 79/South Main Street. The existing structure contains three suites; one of which is currently occupied by a barber shop. The reaming two suites are available for lease.

The Town 2020 General Plan shows Land Use categories as non-site specific, allowing flexibility of underlying zoning. The subject parcel is generally designated as Downtown Mixed Use (DMU) in the General Plan. The DMU designation is primarily intended to assist with the revitalization of older areas and to provide for a mix of highway-oriented retail goods and commercial services for commuters, workers and residents.

ANALYSIS:

The proposed rezoning site consists of one parcel. It is situated fronting Main Street, also known as Business Loop State Route 79. The lot is currently zoned Neighborhood Office (NO). The properties in immediately adjacent to the subject parcel are zoned as follows:

- North across 20th Street – Highway Business Commercial (B-2)
- East across Main Street – Highway Business Commercial(B-2)

- South – Neighborhood Office (NO)
- West across the alley – Single-Family Residential (R1-6) (Note that this property is owned by the Town of Florence and contains the historic Florence Water Tower.)

FINDINGS:

Staff offers the following findings for the consideration of the Planning and Zoning Commission and Town Council:

1. The proposed zoning is consistent with the Town of Florence 2020 General Plan, specifically the Downtown Mixed Use (DMU) designation.

2. The proposed zoning and development of the site should facilitate ongoing revitalization and redevelopment efforts along Main Street and Business Loop State Route 79 Corridor.

PUBLIC PARTICIPATION:

A notice for the Planning and Zoning Commission public hearing was mailed to all property owners within three hundred (300) feet of the site. Property posting for notice of public hearings was posted on site and advertisements in the local paper per Town requirements. Under Arizona Revised Statutes, Title 9, Section-462.04 and Town of Florence Development Code, a public hearing is required for a Zone Change.

A Citizen Participation meeting was held on February 28 at the Town of Florence Community Development Building at 224 West 20th Street.

Staff notes that as of this writing, no public comments have been received.

The tentative Planning and Zoning Commission/Town Council meeting schedule for this application is as follows:

March 7, 2019	Planning and Zoning Public Hearing
March 18, 2019	Town Council Public Hearing and 1st Reading
April 1, 2019	Town Council and 2nd Reading/Action

All public hearings will be held at Town Hall Council Chambers – 775 North Main Street, Florence, Arizona 85132.

STAFF RECOMMENDATION:

Staff finds that the proposed Zone Change for APN (PZ-15-17-ZC) is in compliance with the Town's 2020 General Plan and therefore recommends that the Planning and Zoning Commission forward to the Town Council a favorable recommendation for this Zone Change, subject to the following conditions:

1. The development of the subject site shall be in conformance to any applicable Town Codes and Ordinances.

2. Property owners agree to waive claims for diminution in value pursuant to Proposition 207 [A.R.S. §12-1134] pursuant to the blank waiver attached hereto as Exhibit B.

3. Any additional conditions deemed necessary by the Planning and Zoning Commission.

Attachments:
- Draft Ordinance
- Exhibit "A"

March 18, 2019

Town of Florence Council

Celaya Zone Change
PZ-19-15

Case PZ-19-15 Rezoning

- Property located at 470 S. Main Street
- APN# 202-09-0010
- Rezone from Neighborhood Office (NO) to Highway Business Commercial (B-2)
- .21 acres

Exhibit A

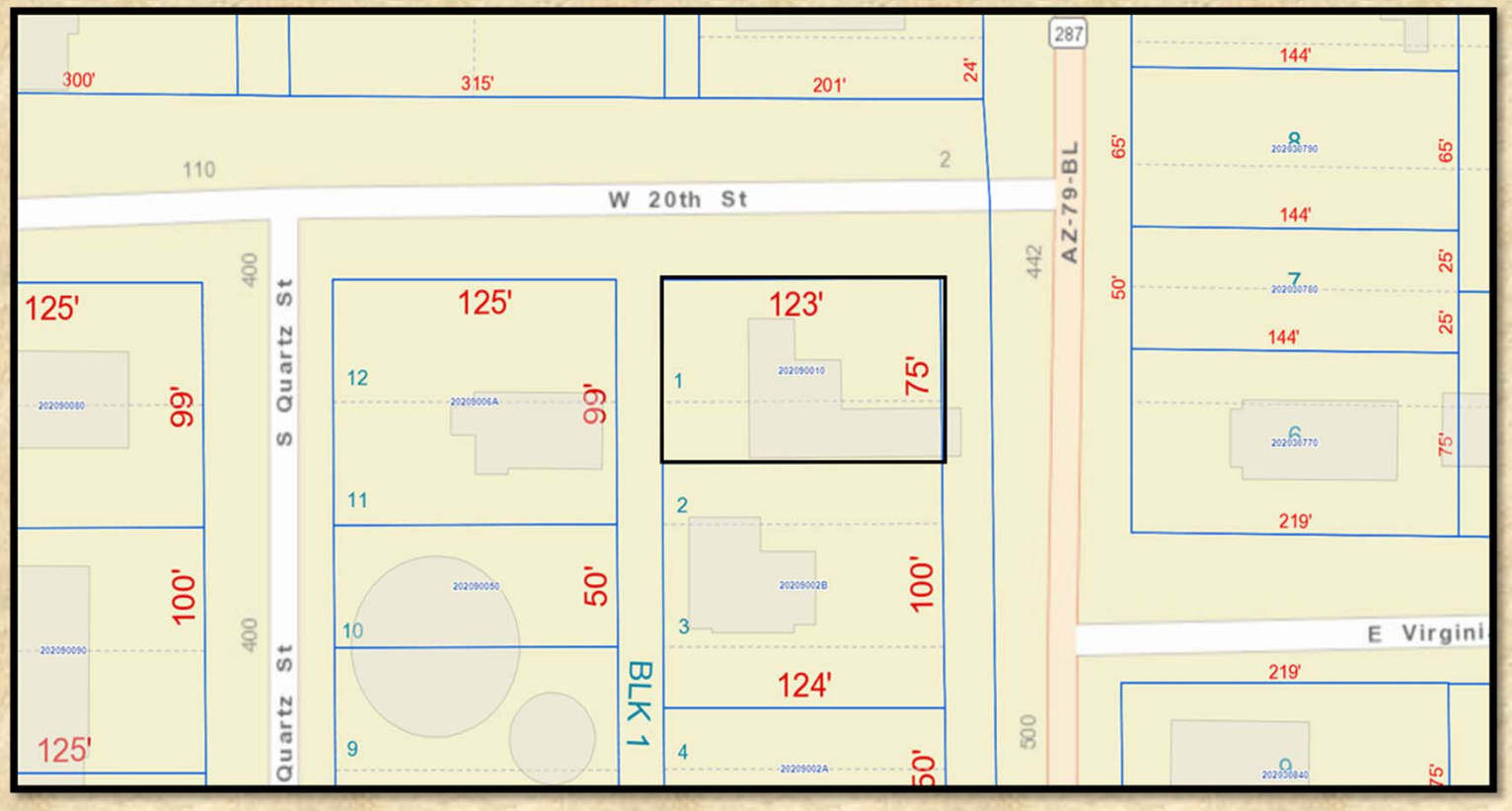
300'
315'
201'
24'
287
144'
110
2
W 20th St
AZ-79-BL
65'
65'
144'
25'
25'
50'
144'
442
125'
99'
400
S Quartz St
125'
99'
123'
75'
12
1
11
2
100'
50'
100'
10
3
E Virgini
124'
219'
125'
9
BLK 1
4
50'
500
75'

W 20th St
W 20th St
W 20th St
Curley Moe's
Barber Shop Salon
S Main St
79
East Virginia Street

Public Outreach

Forms of outreach:

- Mailed notice to those within 300 ft.
- Advertisement posted in local newspaper
- Public Notice sign on site
- Citizen Review Meeting February 28, 2019
- Planning and Zoning Commission Public Hearing March 7, 2019

Findings

Proposed rezoning is consistent with the 2020 General Plan

Rezoning should facilitate ongoing revitalization and redevelopment along Main Street

Recommendation

The Planning and Zoning Commission recommends approval subject to conditions:

- The development of the subject site shall be in conformance to any applicable Town Code and Ordinances.
- Property owners agree to waive claims for diminution in value pursuant to Proposition 207.
- Any Additional conditions deemed necessary by the Town Council.

Questions?

	TOWN OF FLORENCE COUNCIL ACTION FORM	**AGENDA ITEM 6b.**
MEETING DATE: April 1, 2019 **DEPARTMENT:** Community Services **STAFF PRESENTER:** Jasper Halt, Library Manager **SUBJECT:** National Library Week Proclamation		☐ **Action** ☐ **Information Only** ☐ **Public Hearing** ☐ **Resolution** ☐ **Ordinance** ☐ **Regulatory** ☐ **1st Reading** ☐ **2nd Reading** ☒ **Other**
STRATEGIC PLAN REFERENCE: ☒ Community Vitality ☐ Economic Prosperity ☐ Leadership and Governance ☐ Partnership and Relationships ☐ Transportation and Infrastructure ☐ Statutory ☐ None		

RECOMMENDED MOTION/ACTION:

Proclaim the week of April 7 - 13, 2019 as National Library Week in the Town of Florence and encourage all residents to visit the library and explore library collections, services, and programs.

BACKGROUND/DISCUSSION:

First sponsored in 1958, National Library Week is a national observance sponsored by the American Library Association (ALA) and libraries across the country each April. It is a time to celebrate the contributions of our nation's libraries and librarians and to promote library use and support.

For the past 22 years, the Florence Community Library has celebrated National Library Week through its annual bookmark contest, which draws participation from K – 12 students throughout the Florence Unified School District. This year's Bookmark Awards Ceremony, recognizing the winners of the competition for each grade level, will be held on Wednesday, April 10. The library also offers a variety of programs and activities throughout the year, with activities for all ages.

A VOTE OF NO WOULD MEAN:

Not applicable

A VOTE OF YES WOULD MEAN:

Not applicable

FINANCIAL IMPACT:

None

ATTACHMENTS:

National Library Week Proclamation

Proclamation

NATIONAL LIBRARY WEEK 2019
April 7 – 13, 2019

WHEREAS, libraries are not just about what they have for people, but what they do for and with people; and

WHEREAS, libraries have long served as trusted and treasured institutions, and library workers and librarians fuel efforts to better their communities, campuses and schools; and

WHEREAS, librarians are leaders in their institutions and organizations, in their communities, in the nation and in the world; and

WHEREAS, librarians continue to lead the way in leveling the playing field for all who seek information and access to technologies; and look beyond their traditional roles and provide transformative opportunities for education, employment, entrepreneurship, empowerment and engagement, as well new services that connect closely with patrons' needs; and

WHEREAS, libraries and librarians lead their communities in innovation, providing STEAM programing, Makerspaces and access and training for new technologies; and

WHEREAS, libraries are pioneers supporting democracy and effecting social change, with a commitment to providing equitable access to information for all library users regardless of race, ethnicity, creed, ability, sexual orientation, gender identity or socio-economic status; and

WHEREAS, libraries lead in working with diverse communities, including people of color, immigrants and people with disabilities, offering services and educational resources that transform communities, open minds and promote inclusion and diversity; and

WHEREAS, libraries, librarians, library workers and supporters across America are celebrating National Library Week.

NOW, THEREFORE, be it resolved that I Tara Walter, Mayor of the Town of Florence, Arizona, do hereby proclaim April 7 – 13, 2019 as "**NATIONAL LIBRARY WEEK"** and encourage all residents to visit the library this week and explore what's new at your library, and engage with your librarian. Because of you and our library leaders, Libraries Transform.

In witness thereof, I hereby set my hand and affix the Official Seal of the Town of Florence, Arizona, this 1st day of April 2019.

_____
Tara Walter, Mayor

ATTEST:

_____
Lisa Garcia, Town Clerk

	TOWN OF FLORENCE COUNCIL ACTION FORM	**AGENDA ITEM 6c.**
MEETING DATE: April 1, 2019 **DEPARTMENT**: Administration **STAFF PRESENTER:** Mayor Tara Walter **SUBJECT:** 2019 Promise for the Future Proclamation		☐ **Action** ☐ **Information Only** ☐ **Public Hearing** ☐ **Resolution** ☐ **Ordinance** ☐ **Regulatory** ☐ **1st Reading** ☐ **2nd Reading** ☒ **Other**
STRATEGIC PLAN REFERENCE: ☒ Community Vitality ☐ Economic Prosperity ☐ Leadership and Governance ☐ Partnerships and Relationships ☐ Transportation and Infrastructure ☐ Statutory ☐ None		

RECOMMENDED MOTION/ACTION:

Proclamation declaring April 2019 as Promise for the Future Month.

BACKGROUND/DISCUSSION:

Ms. Evelyn Casuga, Senior Advisor, Community Relations, Office of the President, Central Arizona College, has requested that the Town of Florence issue a proclamation to raise awareness that the Central Arizona College Foundation Promise for the Future scholarships provide affordable higher education to our students; and urge everyone to consider supporting the Central Arizona College Foundation Promise for the Future to create a sustaining legacy for students to achieve their full potential with a tuition-free post-secondary education at Central Arizona College.

A VOTE OF NO WOULD MEAN:

Not applicable

A VOTE OF YES WOULD MEAN:

Not applicable

FINANCIAL IMPACT:

None

ATTACHMENTS:

Promise for the Future Proclamation

Proclamation

PROMISE FOR THE FUTURE MONTH

WHEREAS, the Town of Florence recognizes the value of higher education and adopted the Education Progress Meter and the Achieve60 Attainment Goal, and

WHEREAS, the Town of Florence supports completion of post-secondary education by its students to reach their fullest potential, grow local talent and improve economic sustainability for the community; and

WHEREAS, Central Arizona College is the only post-secondary institution in Pinal County; and

WHEREAS, the Central Arizona College Foundation created the Promise for the Future scholarship for Pinal County high school graduates to earn a tuition-free education at Central Arizona College by agreeing to and fulfilling requirements from eighth grade through high school graduation; and

WHEREAS, the Central Arizona College Foundation Promise for the Future scholarship fund is reliant on contributions from individuals, businesses, corporations, governments, and non-profits;

NOW, THEREFORE, I, Tara Walter, Mayor of Town of Florence, Arizona, proclaim the month of April as PROMISE FOR THE FUTURE MONTH, to raise awareness that the Central Arizona College Foundation Promise for the Future scholarships provide affordable higher education to our students; and urge individuals, businesses, corporations, government, and non-profits to consider supporting the Central Arizona College Foundation Promise for the Future to create a sustaining legacy for students to achieve their full potential with a tuition-free post-secondary education at Central Arizona College.

Issued this 1st day of April 2019.

_____
Tara Walter, Mayor

ATTEST:

_____
Lisa Garcia, Town Clerk

	TOWN OF FLORENCE COUNCIL ACTION FORM	**AGENDA ITEM 7a.**
MEETING DATE: April 1, 2019 **DEPARTMENT:** Community Services **STAFF PRESENTER:** Bryan Hughes, Community Services Director **SUBJECT:** Professional Services Agreement – Lantis Fireworks		☒ **Action** ☐ **Information Only** ☐ **Public Hearing** ☐ **Resolution** ☐ **Ordinance** ☐ **Regulatory** ☐ **1st Reading** ☐ **2nd Reading** ☐ **Other**
STRATEGIC PLAN REFERENCE: ☒ Community Vitality ☐ Economic Prosperity ☐ Leadership and Governance ☐ Partnership and Relationships ☐ Transportation and Infrastructure ☐ Statutory ☐ None		

RECOMMENDED MOTION/ACTION:

Approval of an amendment to the Professional Services Agreement with Lantis Productions, Inc. (dba Lantis Fireworks and Lasers) increasing the total contract to $36,000.

BACKGROUND/DISCUSSION:

The Town has utilized Lantis Fireworks and Lasers for several years to provide fireworks for the annual Fourth of July Freedom Fest.

Last year, the Town issued a Request for Proposals, which indicated a multiyear agreement may be considered based on qualifications and experience. The Town entered into a professional services agreement with Lantis for the 2018 fireworks display for $18,000.

This amendment to the 2018 professional services agreement will allow us to continue to contract with Lantis for an additional year for an additional $18,000, bringing the two-year total to $36,000. The original contract was within the Town Manager's purchasing authority. This amendment increases the total contract, which exceeds the Town Manager's authority and requires Town Council approval.

A VOTE OF NO WOULD MEAN:

Staff would need to re-advertise for the services.

A VOTE OF YES WOULD MEAN:

The Town would continue the professional services agreement for one more year. In fall of this year, staff will issue a new request for proposals for future years.

FINANCIAL IMPACT:

$18,000 for fireworks was included in the Fiscal Year 2019 budget and already paid following the 2018 event.

$18,000 for fireworks for the 2019 Fourth of July Freedom Fest is to be paid from Fiscal Year 2020 budget.

ATTACHMENTS:

Lantis Productions, Inc. Professional Services Contract
Request for Proposals – 4th of July Fireworks Show (2018)
Contract Amendment #1

COMMUNITY SERVICES DEPARTMENT SERVICES AGREEMENT

The SERVICES AGREEMENT (the "Agreement") is entered into by and between Lantis Productions, Inc. ("Vendor") and the Town of Florence, a political subdivision of the State of Arizona ("Town"), effective as of February 26, 2018 Town and the Vender may be referred to in this Agreement collectively as the "parties" and each individually as a "party".

NOW THEREFORE, in consideration of the mutual promises and obligations contained herein, and other good and valuable consideration, the receipt and sufficiency of which is hereby acknowledged, Vendor and Town agree as follows:

Scope of Services: Vendor shall provide the Services described in the Scope of Services attached hereto and incorporated herein as Exhibit "A" (the "Services" or "Scope of Services", or "Program"). All work shall be reviewed and approved by Town's Contract Administrator to determine acceptable completion. Review and approval by the Contract Administrator shall not relieve Vendor of any liability for improper, negligent or inadequate Services rendered pursuant to this Agreement.

Fees: The amount paid to the Vendor under this Agreement, including reimbursable expenses, shall not exceed 18,000. Vendor shall be paid in full within 30 days of the completion of the Program.

Termination for Convenience: Town has the right to terminate, suspend or abandon this Agreement for cause or convenience, or to terminate any portion of the Services which have not been performed by the Vendor. Town may terminate this Agreement, or any part thereof for its sole convenience, at any time without penalty or recourse. Vendor shall receive payment for Services satisfactorily completed and accepted by Town, as determined by Town in its reasonable discretion, based on the Scope of Services and schedule for payment.

Independent Contractor: It is understood that Vendor shall be an independent contractor with respect to Services provided under this Agreement, and shall not be deemed to be a partner, employee, joint venturer, agent, or to have any other legal relationship with Town. As an independent contractor, Vendor shall: (a) have discretion in deciding upon the method of performing the Services provided; (b) not be entitled to worker's compensation benefits from the Town; (c) not be entitled to any Town sponsored benefit plan; (d) shall select the hours of his/her work; (e) shall provide her/his own equipment and tools; and(f) to the extent required by law, be responsible for obtaining and remaining licensed to provide the Services. Except as otherwise expressly provided herein, Town shall not be responsible for the payment of any taxes, permit fees or licenses incurred or required by Vendor in order to perform Services under this Agreement. Vendor understands that the Vendor is responsible to pay, according to law, the Vendor's income tax, and this may include Vendor's self-employment, social security, and other taxes. As an independent contractor, Vendor is responsible for providing all workers' compensation insurance required by law. Vendor shall be solely responsible for the acts and omissions of its officers, agents, servants, and employees.

Cancellation of Agreement: This Agreement is subject to cancellation by Town pursuant to A.R.S. § 38-511, the provisions of which are incorporated herein by reference.

Subject to allocation of fault, the Vendor shall at all times indemnify, keep indemnified, defend and save harmless Town and any of its Mayor, council members, officials, officers, from any and all claims, demand, suits, actions, proceedings, loss, costs and/or damages of every kind and description caused in whole or in part by Vendor acts or omissions or those of parties for whose conduct Vendor is responsible, including any attorney's fees and/or litigation expenses which may be brought or made against or incurred by Town on account of loss or damage to any property or for injuries to or death of any person caused by, arising out of, or contributed to, in whole or in part, by reason of any alleged act, omission, professional error, fault, mistake, or negligence of the Vendor, its employees, agents, representatives or subcontractors, their employees, agents or representatives in connection with or incidental to the performance of this Agreement arising out Workers' Compensation claim, Unemployment Compensation Claims, or Unemployment Disability Compensation claim of employees of the Vendor or its subcontractors or claims under similar

laws or obligations. The Vendor's obligations under this paragraph shall not extend to any liability caused by the negligence of Town or its employees.

In the event that any action or proceeding shall at any time be brought against Town by reason of any claim referred to in this Section, the Vendor, at Vendor's sole cost and on at least 10 days written notice from Town, shall defend the same with counsel acceptable to Town, in Town's reasonable discretion. The Vendor's obligations under this Section shall survive the expiration or earlier termination of this Agreement Insurance provisions set forth in this Agreement are separate and independent from the indemnity provisions of this Section and shall not be construed in any way to limit the scope and magnitude of this indemnification, nor shall this indemnification be construed in any way to limit the scope, magnitude or applicability of the insurance provisions.

Vendor liability hereunder is limited to the portion of fault attributed by the fact finder to Vendor, who shall make separate special verdicts on total damages and the proportional fault.

Notice: Unless otherwise provided herein, demands or notices under this Agreement will be in writing and will be deemed to have been duly given and received either (a) on the date of services if personally delivered to the party to whom notice is to be given, or (b) on the 3rd day after the date of the postmark of deposit by first class United States mail, registered or certified postage prepaid and properly addressed according to the party's place of business as set forth herein.

Insurance:

A. The Vendor shall provide and maintain and cause any subcontractors to provide and maintain appropriate insurance. In no event shall the total coverage be less than the minimum insurance coverage specified below:

    1. Commercial General Liability in an amount of not less than One Million Dollars ($1,000,000) per occurrence and Two Million Dollars ($2,000,000) general aggregate.
    2. Automobile Liability in an amount of not less than One Million Dollars ($1,000,000) per occurrence.
    3. Statutory Workman's compensation.

B. The Vendor shall name Town, its Mayor, council members, agents, officers, representatives, officials, volunteers and employees as additional insureds and shall specify that the insurance afforded by the Vendor shall be primary insurance and that any insurance coverage carried or self-insurance by Town, any department or employee shall be excess coverage and not contributory insurance to that provided by the Vendor. Said policy shall contain a severability of interest provision. Town reserves the right to continue payment of premium for which reimbursement shall be deducted from amounts due or subsequently due Vendor.

C. Failure on the part of the Vendor to procure and maintain the requested liability insurance and provide proof thereof to Town within ten (10) days following the commencement of a new policy, shall constitute a material breach of the Agreement upon which Town may immediately terminate this Agreement. Within ten (10) days of signing this Agreement, the Vendor shall furnish the Town with copies of the Certificate of Insurance and Endorsements drawn in conformity with the above insurance requirements. Town reserves the right to request and receive certified copies of any or all of the above policies and endorsements.

D. The Vendor agrees to comply with statutory requirements for both workers' compensation and unemployment insurance coverage during the term of this Agreement. A Certificate of Insurance for workers' compensation coverage shall be provided within ten (10) days of signing this Agreement. The insurer shall agree to waive all rights of subrogation against Town, its Mayor and Council members, its officers, representatives, officials, volunteers, agents, and employees for losses arising from Services performed by the Vendor for Town.

E. The Vendor is primarily responsible for the risk management of its Services under this Agreement, including but not limited to obtaining and maintaining the required insurance and establishing and maintaining a reasonable risk control and safety program. Town reserves the right to amend the requirements herein at any time during the Agreement subject to at least (5) days written notice. The Vendor shall require any and all subcontractors to maintain insurance as required herein naming Town and Vendor as "Additional Insured" on all insurance policies, except Worker's Compensation, and this shall be reflected on the Certificate of Insurance. The Vendor's insurance coverage shall be primary insurance with respect to all other available sources. Coverage provided by the Vendor shall not be limited to the liability assumed under the Indemnification provision of this Agreement. To the extent permitted by law, Vendor waives all rights of subrogation or similar rights against Town, its Mayor and council members, officials, agents, representatives, officers, volunteers and employees. All insurance policies, except Workers' Compensation required by this Agreement, and self-insured retention or deductible portions, shall name, to the fullest extent permitted by law for claims arising out of the performance of this Agreement, Town, its Mayor and council members, agents, representatives, officers, directors, officials, volunteers and employees as Additional Insureds. Town reserves the right to require complete copies of all insurance policies and endorsements required by this Agreement at any time. Failure to maintain the insurance policies as required by this Agreement, or to provide evidence of renewal, is a material breach of contract.

COUNTERPARTS: This Agreement may be executed in one or more counterparts, and each originally executed duplicate counterpart of this Agreement shall be deemed to possess the full force and effect of the original, but all of which together shall constitute one and the same instrument, binding on all of the parties. The parties agree that this Agreement may be transmitted between them via facsimile. The parties intend that faxed signatures constitute original signatures and that a faxed Agreement containing the signatures (original or faxed) of all the parties is binding upon the parties.

CONSTRUCTION: The terms and provisions of this Agreement represent the results of negotiations between the parties, each of which has been or has had the opportunity to be represented by counsel of its own choosing, and neither of which has acted under any duress or compulsion, whether legal, economic or otherwise. Consequently, the terms and provisions of this Agreement shall be interpreted and construed in accordance with their usual and customary meanings, and the parties each hereby waive the application of any rule of law which would otherwise be applicable in connection with the interpretation and construction of this Agreement that ambiguous or conflicting terms or provisions contained in this Agreement shall be interpreted or construed against the party whose attorney prepared the executed Agreement or any earlier draft of the same.

DISPUTES, GOVERNING LAW: Should any dispute, misunderstanding or conflict arise as to the terms or provisions contained in this Agreement, the matter shall first be referred to Town, and Town shall determine the term or provision's true intent and meaning. This Agreement shall be deemed to be made under, shall be construed in accordance with, and shall be governed by the laws of the State of Arizona, without reference to choice of law or conflicts of laws principles thereof.

ENTIRE AGREEMENT: This Agreement constitutes the entire understanding of the parties and supersedes all previous representations, written or oral, with respect to the Services specified herein. The Agreement may not be modified or amended except by a written document, signed by authorized representatives for each party.

LICENSES: Vendor shall maintain in current status all Federal, State, and Local licenses and permits required for the operations of the business conducted by Vendor and the Services to be provided under this Agreement.

PERMITS AND RESPONSIBILITIES: Vendor, shall, without additional expense to Town, be responsible for obtaining any necessary licenses and permits and for complying with any applicable Federal, State, County and Municipal Laws, codes and regulations in connection with the execution of the work, provision of Services and provision of materials.

NON-EXCLUSIVE REMEDIES: The rights and the remedies of Town under this Agreement are not exclusive. Town shall be entitled to offset against any sums due to Vendor, any expenses or costs incurred by Town, or damages assessed by Town concerning Vendor's non-conforming performance or failure to perform the Agreement, including costs and damages incurred by Town.

SURVIVAL: All warranties, representations and indemnification by Vendor shall survive the completion, expiration, or termination of this Agreement.

IN WITNESS WHEREOF, Vendor and Town have caused this document to be executed by their duly authorized representatives, this 26 date of February, 2018.

REVIEWED:

By: 6/15/18
Community Services Director

AS TO FORM:

By:
Town Attorney

TOWN OF FLORENCE:

By:
Town Manager/Deputy Town Manager

VENDOR:

By:

Request for Proposals

Town of Florence

Fourth of July Fireworks Show

Town of Florence

P.O. Box 2670

775 North Main Street

Florence, Arizona 85132

Issued: January 22, 2018

Contact: Alison Feliz, Recreation Coordinator- alison.feliz@florenceaz.gov

NOTICE AND REQUEST FOR

PROPOSALS TOWN OF FLORENCE

Request for Proposals
4th of July Fireworks Show

Solicitation Number: – 4th of July Fireworks Shows
Submittal Deadline: February 16, 2018 by 12:00 p.m. (local Arizona time)
Submittal Location: Town Clerk's Office 775 N. Main Street or PO Box 2670, Florence, AZ 85123
Question Deadline: February 2, 2018
General or RFP Process Questions/ Contact Person: Alison Feliz at alison.feliz@florenceaz.gov or (520)868-7585

RFP Firework Documents available at: www.florenceaz.gov/rfp

Date and Location for Submittal of Sealed Proposals: Notice is hereby given that sealed Proposals will be received at the Town of Florence Clerk's Office, Town Hall, 775 North Main Street, Florence, Arizona 85132 until 12:00 p.m. (Arizona time) on Friday, February 16, 2018, for the 4th of July Fireworks Show. Proposals must be submitted in a sealed envelope clearly marked on the outside with **"4th of July Fireworks Show"** and the solicitation number (Fireworks Show). Any Proposal received after the time specified will be returned unopened. It is the Proposer's responsibility to assure Proposals are received at the above location on or before the specified time. Late proposals will not be considered.

One (1) original and three (3) copies of the bid/proposal shall be submitted in a sealed envelope with the proposal name, proposal number, proposer's name and address clearly indicated on the envelope. All proposals must be submitted in ink or typewritten. No oral, telegraphic, electronic, facsimile, or telephonic proposals or modifications will be considered unless specified. Additional instructions for preparing an offer are provided within the RFP.

4th of July Fireworks Show: The Town of Florence ("Florence" or "Town") is seeking proposals from qualified firms who have experience in providing fireworks and pyro technicians for fireworks display. Annually the Town presents a fireworks display for its 4th of July celebration. The fireworks are viewed by thousands of citizens. The description of the 4th of July Fireworks Show is set forth in the Proposal Documents (the "RFP" or "Request for Proposals") available at www.florenceaz.gov/rfp. A multiyear contract may be considered based on qualifications and experience.

Proposal Requirement: Each Proposal shall be in accordance with the Proposal requirements, set forth in the Request for Proposals, which may be downloaded from www.florenceaz/gov/rfp or obtained by contacting "contact person" at (520) 868-7585 or alison.feliz@florenceaz.gov. Any Proposal which does not conform in all material respects to the Request for Proposals will be considered non-responsive and rejected. Vendor is responsible for obtaining any amendments either through updates on the website, or by contacting the person cited above for general questions.

Right to Reject Proposals: Notwithstanding any other provision of this RFP, The Town of Florence expressly reserves the right to reject any or all Proposals, or portions thereof; and/or waive any defect or informality in a Proposal; and/or reissue an RFP; and/or exercise any other rights available to the Town under the terms of the RFP, the Town Code, law, or equity; and/or to withhold the award of the RFP for any reason the Town determines.

Proposer Questions: All questions regarding the contents of this solicitation, and solicitation process (including requests for ADA accommodations), shall be directed solely to the Project contacts listed on the RFP cover page, or designees. Questions shall be submitted in writing via email. Questions received after the Questions Date and Time Deadline above may be answered at the sole discretion of the Town.

Addenda/Clarifications: Any changes to the solicitation specifications will be in the form of an addendum. Addenda are posted at www.florenceaz.gov/rfp. The Town shall not be held responsible for any oral representations or statements relating to the solicitation specifications made by an employee, agent or officer of the Town. Failure to acknowledge receipt of any addendum by Proposer may result in disqualification of that Proposer's proposal in the sole discretion of the Town.

Execution of Contract: No contract or agreement, express or implied, shall exist or be binding on the Town before the execution of a written contract by both parties. If agreement on the terms of a resultant contract cannot be reached after a period deemed reasonable by the Town in its sole discretion, the Town may negotiate and enter a contract with any other Proposer/proposer who submitted a timely, responsive and responsible proposal to this RFP.

Terms: The terms "Proposer", "Offeror", "Vendor", "Offerors", and "Bidder" may be utilized interchangeably in the provisions of this solicitation and the Proposal Documents. The Town and Proposer may be referred to in this Contract collectively as the "parties" and each individually as a "party".

Equal Opportunity: The Town of Florence is an equal opportunity employer. Minority and women's business enterprises are encouraged to submit Proposals on this solicitation.

DATED: _____ TOWN OF FLORENCE, ARIZONA

_____

Town Clerk

IMPORTANT
PROPOSER'S SUBMITTAL
CHECK LIST

It is the Proposer's responsibility to be familiar with all requirements and specifications:

1. The Proposal has been signed in the Proposer's Offer Section. (Proposals not signed in this section will not be considered.) Authorized Signature Form is enclosed. Addenda have been reviewed and signed and are included.

2. The Proposal amount offered (if applicable) has been reviewed.

3. A detailed description of the firework show is included.

4. Return deviation/compliance certification

5. Return Offer Sheet

6. Return reference sheet

7. Return "Demonstrating Lawful Presence" Form

8. W-9 Form is complete and included.

9. The mailing envelope/package has been

   addressed to: Town Clerk
   Town of Florence
   775 N. Main Street
   PO Box 2670
   Florence, AZ 85132

10. Proposal Package/Envelope has been identified with Proposer's name and Proposal number 4th of July Fireworks Show.

11. The Proposal is submitted and stamped in by Clerk's Office representative no later than specified time on designated date. (Otherwise the Proposal cannot be considered.)

4th OF JULY FIREWORKS SHOW

These terms will be the general contract conditions for any contract entered into as a result of the RFP and are incorporated therein and shall be fully binding upon the Proposer.

I. REQUIREMENTS FOR PROPOSERS.

1.1 Proposal Opening Date and Location: Sealed Proposals will be received at the Town of Florence Clerk's Office, Town Hall, 775 North Main Street, Florence, Arizona 85132 until 12:00 p.m. (local Arizona time) Thursday, February 16, 2018, at which time the Proposals will be opened and publicly read. Late Proposals will not be accepted or considered by the Town.

1.2 Proposal Documents Available: The Proposal Documents consist of: (1) Requirements for Proposers; (2) Special Conditions; (3) Proposer's Proposal (form); (4) Compliance Certification(s) (form) (5) Offer Sheet (form) (6) Demonstrating lawful Presence (form) and (7) Reference (form). The Proposal Documents are available for downloading from www.florenceaz.gov/rfp at no charge or by contacting Alison Feliz, at alison.feliz@florenceaz.gov, and may be obtained upon request.

1.3 Incorporation of Proposal Documents: All of the Proposal Documents apply to and become a part of the terms and conditions of the Proposer's offer/proposal. The resultant contract between the Town and the Proposer shall include the: (1) RFP, including instructions, all terms and conditions, specifications, scope of work, attachments, any amendments thereto, any contract documents, and the Proposal Documents; and (2) the offer submitted by the Proposer in response to the RFP only to the extent it is consistent with the RFP terms and contract documents. All previous contracts between the Proposer and the Town are not applicable to this contract or other resultant contracts. Any award to a Proposer will be subject to a selected Proposer entering a services contract provided by and acceptable to the Town of Florence.

1.4 Proposer's Proposal Form: Proposals must be submitted only on the Proposer's Proposal form. All Proposals must be submitted in a sealed envelope clearly marked "Proposal for 4th of July Fireworks Show - Solicitation Fireworks Show, Office of the Town Clerk."

1.5 Florence's Right to Reject Proposals: Notwithstanding any other provision of this RFP, the Town expressly reserves the right to reject any or all Proposals, or portions thereof; and/or waive any defect or informality in a Proposal; and/or reissue an RFP; and/or exercise any other rights available to the Town under the terms of the RFP, the Town Code, law, or equity; and/or to withhold the award of the RFP for any reason the Town determines.

1.6 Execution of Contract: No contract or agreement, expressed or implied, shall exist or be binding on the Town before the execution of a written contract by both parties. If agreement on the terms of a resultant contract cannot be reached after a period deemed

reasonable by the Town in its sole discretion, the Town may negotiate and enter a contract with any other Proposer who submitted a timely, responsive and responsible proposal to this RFP.

1.7 Additional Investigation: The Town reserves the right to make such additional investigations as it deems necessary to establish the competence and financial stability of any Proposer submitting an offer.

1.8 Prior Experience: Experiences with the Town and entities that the evaluation committee members represent may be taken into consideration when evaluating qualifications and experience.

1.9 Cost of Proposal: The Town shall not reimburse the cost of developing or providing any response to this RFP and development and provision of any offer shall be at the respective Proposer's sole cost. Offers submitted for consideration should be prepared simply and economically, providing adequate information in a straightforward and concise manner.

1.10 Late Proposals: Late submittals and/or unsigned proposals will not be considered under any circumstances. Envelopes containing Proposals with insufficient postage will not be accepted by Florence. It is the sole responsibility of the Proposer to see that his/her proposal is delivered and received by the proper time and at the proper place.

1.11 Proposal Amendment or Withdrawal: A proposal may be withdrawn any time before the Proposal due date and time. A proposal may not be amended or withdrawn after the proposal due date and time except as otherwise provided by applicable law.

1.12 Public Record: All proposals submitted in response to this solicitation and all evaluation related records shall become property of Florence and shall become a matter of public record for review, subsequent to proposal award. Request for nondisclosure of data such as trade secrets and other proprietary data, must be made known in writing to Florence in proposals submitted, and the information sought to be protected clearly marked as proprietary. Florence will not insure confidentiality of any portions of the proposal that are submitted in the event that a public record request is made. The Town will provide 48 hours' notice before releasing materials identified by the proposal as confidential or proprietary in order for the Proposer to apply for a court order blocking the release of the information.

1.13 Persons with Disabilities: Persons with a disability may request a reasonable accommodation, such as a sign language interpreter, by contacting the Clerk's Office. Requests shall be made as early as possible to allow time to arrange the accommodation.

1.14 Proposal Acceptance Period: All proposals shall remain open for 90 days after the day of the opening of proposals, but the Town may, at its sole discretion, release any proposal and return the proposal security (as applicable) prior to that date. No Proposer may withdraw his proposal during this period without written permission from the Town.

Should any Proposer refuse to enter into a contract, under the terms and conditions of the procurement, the Town may retain the security (as applicable), not as a penalty, but as liquidated damages.

1.15 Addendum: This Request for Proposals may only be modified by a written Addendum. Potential Proposers are responsible for obtaining all addenda.

1.16 General Evaluation Standards: The Town of Florence is seeking proposals from qualified firms who have experience in providing fireworks and pyro technicians for fireworks displays. The Town will be the sole judge of whether the proposals offered are acceptable.

1.16.1 Deviations. Any deviations from General Evaluation Standards contained in section 1.16 or required content under section 1.17.5 may render the proposal non-responsive.

1.16.2 Disqualification. A Proposer (including each of its principals) who is currently debarred, suspended or otherwise lawfully prohibited from any public procurement activity may have its proposal rejected. The Proposer will be required to submit documentation demonstrating lawful presence in the United States pursuant to A.R.S. §§ 1-501 and 1-502 by completing the *Demonstrating Lawful Presence* form provided by the Town.

1.16.3 Waiver and Rejection Rights. The Town reserves the right to reject any or all proposals or to cancel the solicitation altogether, to waive any informality or irregularity in any proposal received, and to be the sole judge of the merits of the respective proposals received.

1.17 Proposal Preparation:

1.17.1 Format. Proposers shall submit their proposal with an original and three (3) copies and shall be submitted either on the forms provided in this solicitation or their substantial equivalent. Any substitute document must be legible and contain the same information requested on the forms.

1.17.2 No Facsimile or Electronic Mail Proposals. Proposals may not be submitted in facsimile or electronically. All facsimile or electronic mail proposals shall be rejected.

1.17.3 Typed or Ink Corrections. The proposal shall be typed or in ink. Erasures, interlineations or other modifications in the proposal shall be initialed in ink by the person signing the proposal.

1.17.4 No Modifications. Modifications shall not be permitted after proposals have been opened except as otherwise provided under applicable

law.

1.17.5 Content. The proposal shall contain all of the following information:

Proposal Amount. The proposal amount for the Fireworks Show shall be listed in the Proposal Section. Upon receipt and acceptance of goods or services, the Proposer shall submit a complete and accurate invoice for payment from the Town within (30) days and pursuant to any resultant contract for services provided by the Town. Provide evidence of possessing necessary permits and licenses for the proposed fireworks display in the Town.

Description of proposed display. Fireworks Materials – quantity, quality, diversity, and size of materials. Fireworks Display Narrative / Worksheets (Provide Digital Media if available) - Provide a narrative description of the proposed fireworks display which includes the order in which shells are to be fired and any proposed laser technology, if applicable. Note: The inclusion of laser technology is not a requirement of this proposal.

Brief description of the Proposer/Experience/Qualifications. Provide a brief history of your firm, including addresses for all locations and years in business. Identify the key individuals that would be committed to this program, including the head pyro technician and assistant pyro technician. Head and assistant pyro technician must possess an appropriate number of years of experience and fired displays, which clearly demonstrates competency in this field. Identify number of displays fired, of the size and nature of the displays proposed in the scope of work herein, within the previous 12 months, by the head pyro technician (or for any head pyro technician who could be assigned to this contract). Provide an organizational chart identifying the key personnel, including qualifications, job titles, duties and responsibilities, and reporting relationships. Identify three (3) references for which similar work has been performed, including the name of the contract, contact name and telephone number, and type of operation. Identify any sub Proposers, if any, you might propose to use in the operation and their specific qualifications. Identify and describe any accidents or violations the firm or individual employees have been involved in while performing firework services. Provide the firm's safety policy / plan. Provide copies of either a Shooter Card or Fire Certification.

Tax ID Number. Proposer shall provide its Arizona Transaction Privilege Tax Number and/or Federal Tax Identification number in the space provided in the Proposal Section. A Town of Florence Sales Tax Number, if applicable, must also be supplied.

1.17.6 Solicitation Addendum Acknowledgement. Each Solicitation Addendum shall be acknowledged in the proposal Section, which shall be submitted together with the proposal by the proposal deadline. Failure to note a Solicitation Addendum may result in rejection of the proposal.

1.17.7 Evidence of Intent to be Bound. The proposal form submitted shall include a signature by a person authorized to sign the proposal. The offer sheet shall be submitted. Failure to submit verifiable evidence of intent to be bound, such as an original signature, shall result in rejection of the proposal.

1.17.8 Non-Collusion and Non-Discrimination. By signing and submitting the Proposal, the Proposer certifies that:

A. The Proposer did not engage in collusion or other anti-competitive practices in connection with the preparation or submission of its proposal; and

B. The Proposer does not discriminate against any employee or applicant for employment or person to whom it provides services because of race, color, religion, age, sex, national origin, or disability, and that it complies with all applicable Federal, state and local laws and executive orders regarding employment.

1.18 Inquiries:

1.18.1 Duty to Examine. It is the responsibility of each Proposer to examine the entire Solicitation, seek clarification (inquiries), and examine its proposal for accuracy before submitting the proposal. Lack of care in preparing a proposal shall not be grounds for modifying or withdrawing the proposal after the proposal due date and time, nor shall it give rise to any contract claim.

1.18.2 Contact Person. Any inquiry related to a solicitation, including any requests for or inquiries regarding standards referenced in the solicitation should be directed solely to the contact person listed on the cover page of the Solicitation. The Proposer shall not contact or direct inquiries concerning this solicitation to any other Florence employee unless the solicitation specifically identifies a person other than the Contact Person as a contact.

1.18.3 Submission of Inquiries. All inquiries shall be submitted in writing and shall refer to the appropriate solicitation number, page and paragraph. Do not place the solicitation number on the outside of the envelope containing the inquiry, since it may then be identified as a proposal and not be opened until after the proposal due date and time. The Town shall consider the relevancy of the inquiry but is not required to respond in writing.

1.18.4 Timeliness. Any inquiry or exception to the solicitation shall be submitted as soon as possible and should be submitted at least 5 days before the proposal due date and time for review and determination by Florence. Failure to do so may result in the inquiry not being

considered for a Solicitation Addendum.

1.18.5 No Right to Rely on Verbal Responses. A Proposer shall not rely on the Town verbal responses to inquiries. A verbal reply to an inquiry does not constitute a modification of the solicitation.

II. SPECIAL CONDITIONS.

2.1 Length of Program: The 4th of July fireworks display shall be at least 20 minutes in length.

2.2 Music: If the Town secures a music/radio sponsor, the Proposer will be required to work closely with the music/radio sponsor to coordinate the music selection, which will include a variety of patriotic and contemporary music, with the fireworks display. All music must be reviewed and approved by Town of Florence staff prior to the event.

2.3 Sound: If music is made part of the display, the Town will provide the equipment necessary for playing music and a professional sound system for the audience.

2.4 Fireworks Display: The display will be fired from the designated area as determined by the Town either electronically or manually as long as both processes meet all regulatory requirements. In addition, the Town may be agreeable to the inclusion of laser technology in the program. The display shall include both a distinct opening and a distinct closing portion. Shells used in the display shall be approved as to size by the Florence Fire Department and shall range from 3-12 inches in size and include low-level fireworks. Shells do not need to be preloaded. Proposer may propose fireworks that vary from the size specified. However, it is the sole responsibility of the Proposer to propose a display that is site appropriate and is in compliance with all regulatory requirements.

2.5 Display and Discharge Criteria: The fireworks display shall be conducted in accordance with the latest edition of the National Fire Protection Association (NFPA) Standard 1123, Code for Fireworks Display and related requirements for firing a display. All unfired fireworks shall be covered or protected during firing. Any shell not properly fired shall be disposed of in accordance with applicable regulations.

All fireworks material shall be clearly marked, indicating the type of shell and shall be delivered to the site on the day of firing. A representative of the Town of Florence and/or Florence Fire Department shall conduct inspection and inventory of the fireworks shells at least six (6) hours prior to the display being readied for firing. The firing time for the display shall be 8:30 P.M. dependent upon darkness and weather conditions. Arrangements will be made for access to the firing site prior to July 4th, as requested by the Proposer.

The Proposer shall provide necessary safety equipment, and all tools and materials, including, but not limited to mortar racks, lumber and stakes, etc., which may be required for the firing of the display. The Town will provide the Proposer with containers and sand. In addition, the Town will close down the designated area for the event. Fire extinguishers of appropriate classification and approved as operational shall be accessible and in plain

view from the time the fireworks arrive on site until all fireworks are completely removed from the site. A Firework display worksheets explaining exactly which shells will be fired, and the amount must be completed and submitted with the proposal.

2.6 Inclement Weather: The decision to cancel or postpone the fireworks display due to inclement weather shall be made by the Town of Florence. If the display is canceled, the Town of Florence will pay the Proposer its 'Actual Expenses' related to preparation for the unsuccessful displays on July 4, 2018. 'Actual Expenses' shall include expenses for travel, lodging, labor, meals, rentals, permits, setup and dismantling of the display, and any other expenses related to the unsuccessful attempts to present the display on the Original Date.

2.7 Condition of Site: The Proposer shall be responsible for removing all firing materials, large debris, packing materials, etc., and for filling all holes utilized for firing of the displays. All holes left unattended as a result of postponement of the display shall be marked with safety ribbon or cones. The Town of Florence will be responsible for picking up small debris (e.g. confetti). Removal of all materials shall be completed within three hours after the firing of the display. The Proposer shall walk the fallout zone of the fireworks site the following morning beginning at 6:00 A.M. and shall be responsible for the removal of any unexploded shells and to assist in the cleanup of debris.

2.8 Ground Protection: The Proposer shall provide protection to minimize damage to the area caused by the firing of shells.

2.9 Storage: The Proposer shall assume all responsibility and liability in connection with the storage of fireworks and/or firing materials.

2.10 Permits and Licensing: The Proposer shall obtain all required permits and licenses from the Town of Florence necessary to conduct a fireworks display in the Town of Florence. Proposer shall be responsible for any associated fees.

2.11 Crowd Control: The Town shall provide personnel at the fireworks site for crowd control and site security.

2.12 Proposer Responsibility: The Proposer is the Prime Proposer for purposes of this contract and shall be responsible for completely supervising and directing the setup and discharge of the fireworks displays. Sub Proposers who perform work under this contract shall be responsible to the Prime Proposer. The Prime Proposer agrees that it is as fully responsible for the acts and omissions of its sub Proposers and of persons employed by them as it is for the acts and omissions of its own employees.

2.13 Taxes: The Proposer shall pay all sales, consumer, use and other similar taxes required by the laws of the place where fireworks displays are performed. Taxes to be paid by the Proposer shall include, but shall not be limited to, the Town Of Florence Business and Occupational License Tax if applicable. Proposer's obligations under this section shall survive the expiration or other termination of this contract.

2.14 Substitute Shells: The Proposer may not substitute shells for the shells listed on the display worksheet without prior written approval of the Town of Florence.

2.15 Labeling of Shells: Each shell shall be specifically labeled and inventoried for easy review and identification by the Town representative(s).

2.16 Compliance with Town Code: The Proposer shall comply with all applicable provisions of Chapter 112.42 of the Florence Town Code.

2.17 Insurance.

2.17.1 Liability Insurance. Proposer shall maintain commercial general liability insurance covering actions by Proposer providing for a limit of not less than $2,000,000.00 single limit, bodily injury and/or property, agents and employees as additional insured.

2.17.2 Adequacy of Insurance. Town makes no representation or warranty to Proposer that the amount of insurance to be carried by Proposer under the terms of this contract is adequate to fully protect Proposer's interests. Proposer acknowledges that Town shall not, by the fact of approving, disapproving, waiving, accepting, or obtaining any insurance, incur any liability for or with respect to the amount of insurance carried, the form or legal sufficiency of such insurance, the solvency of any insurance companies or the payment or defense of any lawsuit in connection with such insurance coverage, and Proposer hereby expressly assumes full responsibility for all liability, if any, with respect to, Proposer's insurance coverage.

2.17.3 Certificate. Upon execution of the resulting contract, Proposer shall deliver to Town a certificate of insurance and endorsements evidencing the coverage required by this Section.

2.17.4 Risk Management/Additional Insured. Proposer is primarily responsible for the risk management of its services under this contract, including but not limited to obtaining and maintaining the required insurance and establishing and maintaining a reasonable risk control and safety program. Town reserves the right to amend the requirements herein at any time during the contract. Proposer shall require any and all sub Proposers to maintain insurance as required herein naming Proposer and Town as "Additional Insured" on all insurance policies, except Worker's Compensation, and this shall be reflected on the Certificate of Insurance and endorsements. The Proposer's insurance coverage shall be primary insurance with respect to all other available sources. Coverage provided by the Proposer shall not be limited to the liability assumed under the Indemnification provision of this contract. To the extent permitted by law, Proposer waives all rights of subrogation or similar rights against Town, its representatives, agents, and employees. All insurance policies, except Workers' Compensation required by this Agreement, and self-insured retention or deductible portions, shall name, to the fullest extent permitted by law for claims arising out of the performance of this contract, Town, its agents, representatives, officers, directors, officials and employees as Additional Insureds. The Town reserves the right to require complete copies of all insurance

policies required by this contract at any time. Failure to maintain the insurance policies as required by this contract, or to provide evidence of renewal, is a material breach of contract.

2.18 Indemnification: The Proposer shall at all times indemnify, keep indemnified, defend and save harmless Town and any of is mayor, councilmembers, officials, representatives, volunteers and employees from any and all claims, demands, suits, actions, proceeding, loss, cost and/or damages of every kind and description including any attorney's fees and/or litigation expenses which may be brought or made against or incurred by Town on account of loss of or damage to any person or for injuries to or death of any person caused by, arising out of, or contributed to, in whole or in part , by reason of any alleged act, omission, professional error, fault, mistake, or negligence of the Proposer, its employees, agents, representatives, or subcontractors, their employees, agents or representatives in connection with or incidental to the performance of this contract or arising out of Worker's compensation claims, Unemployment Compensation claims, or Unemployment Disability Compensation claims of employees of the Proposer or its subcontractors or claims under similar laws or obligations. The Proposer's obligations under this paragraph shall not extend to any liability caused by the sole negligence of Town or its employees.

In the event that any action or proceeding shall at any time be brought against Town by reason of any claim referred to in this Section, the Proposer, at Proposer's sole cost and upon at least 10 day's written notice from Town shall defend the same with counsel acceptable to Town, in Town's sole discretion. The Proposer's obligations under the Section shall survive the expiration or termination of this contract. Insurance provisions set forth in this contract are separate and independent from the indemnity provisions of this section and shall not be construed in any way to limit the scope of the magnitude of this Indemnification, nor shall this Indemnification be construed in any way to limit the scope, magnitude or applicability of the insurance provisions.

II. PROPOSER'S PROPOSAL

3.1 Proposer's Proposal: For the proposal opening January 22, 2018 for the 4th of July Fireworks Show.

3.2 Conditions Accepted: The undersigned Proposer declares that before preparing this proposal, he or she has read the Proposal Documents (RFP) carefully, and that this proposal is made with full knowledge of the RFP requirements. By signing this proposal, proposer agrees to all conditions contained in the Proposal Documents.

3.3 Proposal Amount: For the terms set forth in Paragraph 3.2 above: Proposers offers to provide the services for a total in the amount of:

(Enter Proposal price in writing) _____("Proposal Amount")

3.4 Acceptance: Proposer proposes and agrees that if this proposal is accepted, he or she will enter into a contract with Florence within fourteen (14) days after Florence's

acceptance of this proposal at the listed Proposal Amount.

3.5 Affidavit: The following affidavit is submitted by the Proposer as part of this Proposal:

The undersigned deponent, of lawful age, being duly sworn upon his oath, deposes and says:

1. The he/she has lawful authority to execute the within and foregoing Proposer's proposal.
2. That the Proposer has not directly or indirectly entered into any agreement , express or implied, with any Proposer or Proposers, having for its object the controlling of the price or amount of such proposal or proposals, the parceling out to any Proposer or any other person of any part of the subject matter of the proposal or proposals or the profits thereof, and that he/she had not and will not divulge the sealed proposal to any other person whatsoever, except those having a partnership or financial interest with him and said Proposer, until after the sealed proposal or proposals are open.
3. That Proposer has received any Addenda issued.

_____
Name

_____
Title

STATE OF ARIZONA)
)SS
County of Pinal)

SUBSCRIBED AND SWORN TO before me this _____ day of_____, 20_____, by_____.

_____
Notary
_____
My Commission Expires: _____

COMMUNITY SERVICES DEPARTMENT SERVICES AGREEMENT

The SERVICES AGREEMENT (the "Agreement") is entered into by and between _____ and the Town of Florence, a political subdivision of the State of Arizona ("Town"), effective as of _____ Town and the Vender may be referred to in this Agreement collectively as the "parties" and each individually as a "party".

NOW THEREFORE, in consideration of the mutual promises and obligations contained herein, and other good and valuable consideration, the receipt and sufficiency of which is hereby acknowledged, Vendor and Town agree as follows:

Scope of Services: Vendor shall provide the Services described in the Scope of Services attached hereto and incorporated herein as Exhibit "A" (the "Services" or "Scope of Services", or "Program"). All work shall be reviewed and approved by Town's Contract Administrator to determine acceptable completion. Review and approval by the Contract Administrator shall not relieve Vendor of any liability for improper, negligent or inadequate Services rendered pursuant to this Agreement.

Fees: The amount paid to the Vendor under this Agreement, including reimbursable expenses, shall not exceed _____. Vendor shall be paid in full within 30 days of the completion of the Program.

Termination for Convenience: Town has the right to terminate, suspend or abandon this Agreement for cause or convenience, or to terminate any portion of the Services which have not been performed by the Vendor. Town may terminate this Agreement, or any part thereof for its sole convenience, at any time without penalty or recourse. Vendor shall receive payment for Services satisfactorily completed and accepted by Town, as determined by Town in its reasonable discretion, based on the Scope of Services and schedule for payment.

Independent Contractor: It is understood that Vendor shall be an independent contractor with respect to Services provided under this Agreement, and shall not be deemed to be a partner, employee, joint venturer, agent, or to have any other legal relationship with Town. As an independent contractor, Vendor shall: (a) have discretion in deciding upon the method of performing the Services provided; (b) not be entitled to worker's compensation benefits from the Town; (c) not be entitled to any Town sponsored benefit plan; (d) shall select the hours of his/her work; (e) shall provide her/his own equipment and tools; and(f) to the extent required by law, be responsible for obtaining and remaining licensed to provide the Services. Except as otherwise expressly provided herein, Town shall not be responsible for the payment of any taxes, permit fees or licenses incurred or required by Vendor in order to perform Services under this Agreement. Vendor understands that the Vendor is responsible to pay, according to law, the Vendor's income tax, and this may include Vendor's self-employment, social security, and other taxes. As an independent contractor, Vendor is responsible for providing all workers' compensation insurance required by law. Vendor shall be solely responsible for the acts and omissions of its officers, agents, servants, and employees.

Cancellation of Agreement: This Agreement is subject to cancellation by Town pursuant to A.R.S. § 38-511, the provisions of which are incorporated herein by reference.

Subject to allocation of fault, the Vendor shall at all times indemnify, keep indemnified, defendant save harmless Town and any of its Mayor, council members, officials, officers, from any and all claims, demand, suits, actions, proceedings, loss, costs and/or damages of every kind and description caused in whole or in part by Vendor acts or omissions or those of parties for whose conduct Vendor is responsible, including any attorney's fees and/or litigation expenses which may be brought or made against or incurred by Town on account of loss or damage to any property or for injuries to or death of any person caused by, arising out of, or contributed to, in whole or in part, by reason of any alleged act, omission, professional error, fault, mistake, or negligence of the Vendor, its employees, agents, representatives or subcontractors, their employees, agents or representatives in connection with or incidental to the performance of this Agreement arising out Workers' Compensation claim, Unemployment Compensation Claims, or Unemployment Disability Compensation claim of employees of the Vendor or its subcontractors or claims under similar

laws or obligations. The Vendor's obligations under this paragraph shall not extend to any liability caused by the negligence of Town or its employees.

In the event that any action or proceeding shall at any time be brought against Town by reason of any claim referred to in this Section, the Vendor, at Vendor's sole cost and on at least 10 days written notice from Town, shall defend the same with counsel acceptable to Town, in Town's reasonable discretion. The Vendor's obligations under this Section shall survive the expiration or earlier termination of this Agreement Insurance provisions set forth in this Agreement are separate and independent from the indemnity provisions of this Section and shall not be construed in any way to limit the scope and magnitude of this indemnification, nor shall this indemnification be construed in any way to limit the scope, magnitude or applicability of the insurance provisions.

Vendor liability hereunder is limited to the portion of fault attributed by the fact finder to Vendor, who shall make separate special verdicts on total damages and the proportional fault.

Notice: Unless otherwise provided herein, demands or notices under this Agreement will be in writing and will be deemed to have been duly given and received either (a) on the date of services if personally delivered to the party to whom notice is to be given, or (b) on the 3rd day after the date of the postmark of deposit by first class United States mail, registered or certified postage prepaid and properly addressed according to the party's place of business as set forth herein.

Insurance:

A. The Vendor shall provide and maintain and cause any subcontractors to provide and maintain appropriate insurance. In no event shall the total coverage be less than the minimum insurance coverage specified below:

    1. Commercial General Liability in an amount of not less than One Million Dollars ($1,000,000) per occurrence and Two Million Dollars ($2,000,000) general aggregate.
    2. Automobile Liability in an amount of not less than One Million Dollars ($1,000,000) per occurrence.
    3. Statutory Workman's compensation.

B. The Vendor shall name Town, its Mayor, council members, agents, officers, representatives, officials, volunteers and employees as additional insureds and shall specify that the insurance afforded by the Vendor shall be primary insurance and that any insurance coverage carried or self-insurance by Town, any department or employee shall be excess coverage and not contributory insurance to that provided by the Vendor. Said policy shall contain a severability of interest provision. Town reserves the right to continue payment of premium for which reimbursement shall be deducted from amounts due or subsequently due Vendor.

C. Failure on the part of the Vendor to procure and maintain the requested liability insurance and provide proof thereof to Town within ten (10) days following the commencement of a new policy, shall constitute a material breach of the Agreement upon which Town may immediately terminate this Agreement. Within ten (10) days of signing this Agreement, the Vendor shall furnish the Town with copies of the Certificate of Insurance and Endorsements drawn in conformity with the above insurance requirements. Town reserves the right to request and receive certified copies of any or all of the above policies and endorsements.

D. The Vendor agrees to comply with statutory requirements for both workers' compensation and unemployment insurance coverage during the term of this Agreement. A Certificate of Insurance for workers' compensation coverage shall be provided within ten (10) days of signing this Agreement. The insurer shall agree to waive all rights of subrogation against Town, its Mayor and Council members, its officers, representatives, officials, volunteers, agents, and employees for losses arising from Services performed by the Vendor for Town.

DRAFT

E. The Vendor is primarily responsible for the risk management of its Services under this Agreement, including but not limited to obtaining and maintaining the required insurance and establishing and maintaining a reasonable risk control and safety program. Town reserves the right to amend the requirements herein at any time during the Agreement subject to at least (5) days written notice. The Vendor shall require any and all subcontractors to maintain insurance as required herein naming Town and Vendor as "Additional Insured" on all insurance policies, except Worker's Compensation, and this shall be reflected on the Certificate of Insurance. The Vendor's insurance coverage shall be primary insurance with respect to all other available sources. Coverage provided by the Vendor shall not be limited to the liability assumed under the Indemnification provision of this Agreement. To the extent permitted by law, Vendor waives all rights of subrogation or similar rights against Town, its Mayor and council members, officials, agents, representatives, officers, volunteers and employees. All insurance policies, except Workers' Compensation required by this Agreement, and self-insured retention or deductible portions, shall name, to the fullest extent permitted by law for claims arising out of the performance of this Agreement, Town, its Mayor and council members, agents, representatives, officers, directors, officials, volunteers and employees as Additional Insureds. Town reserves the right to require complete copies of all insurance policies and endorsements required by this Agreement at any time. Failure to maintain the insurance policies as required by this Agreement, or to provide evidence of renewal, is a material breach of contract.

COUNTERPARTS: This Agreement may be executed in one or more counterparts, and each originally executed duplicate counterpart of this Agreement shall be deemed to possess the full force and effect of the original, but all of which together shall constitute one and the same instrument, binding on all of the parties. The parties agree that this Agreement may be transmitted between them via facsimile. The parties intend that faxed signatures constitute original signatures and that a faxed Agreement containing the signatures (original or faxed) of all the parties is binding upon the parties.

CONSTRUCTION: The terms and provisions of this Agreement represent the results of negotiations between the parties, each of which has been or has had the opportunity to be represented by counsel of its own choosing, and neither of which has acted under any duress or compulsion, whether legal, economic or otherwise. Consequently, the terms and provisions of this Agreement shall be interpreted and construed in accordance with their usual and customary meanings, and the parties each hereby waive the application of any rule of law which would otherwise be applicable in connection with the interpretation and construction of this Agreement that ambiguous or conflicting terms or provisions contained in this Agreement shall be interpreted or construed against the party whose attorney prepared the executed Agreement or any earlier draft of the same.

DISPUTES, GOVERNING LAW: Should any dispute, misunderstanding or conflict arise as to the terms or provisions contained in this Agreement, the matter shall first be referred to Town, and Town shall determine the term or provision's true intent and meaning. This Agreement shall be deemed to be made under, shall be construed in accordance with, and shall be governed by the laws of the State of Arizona, without reference to choice of law or conflicts of laws principles thereof.

ENTIRE AGREEMENT: This Agreement constitutes the entire understanding of the parties and supersedes all previous representations, written or oral, with respect to the Services specified herein. The Agreement may not be modified or amended except by a written document, signed by authorized representatives for each party.

LICENSES: Vendor shall maintain in current status all Federal, State, and Local licenses and permits required for the operations of the business conducted by Vendor and the Services to be provided under this Agreement.

PERMITS AND RESPONSIBILITIES: Vendor, shall, without additional expense to Town, be responsible for obtaining any necessary licenses and permits and for complying with any applicable Federal, State, County and Municipal Laws, codes and regulations in connection with the execution of the work, provision of Services and provision of materials.

NON-EXCLUSIVE REMEDIES: The rights and the remedies of Town under this Agreement are not exclusive. Town shall be entitled to offset against any sums due to Vendor, any expenses or costs incurred by Town, or damages assessed by Town concerning Vendor's non-conforming performance or failure to perform the Agreement, including costs and damages incurred by Town.

SURVIVAL: All warranties, representations and indemnification by Vendor shall survive the completion, expiration, or termination of this Agreement.

IN WITNESS WHEREOF, Vendor and Town have caused this document to be executed by their duly authorized representatives, this_____ date of _____, 2018.

REVIEWED:

By: _____
Community Services Director

AS TO FORM:

By: _____
Town Attorney

TOWN OF FLORENCE:

By: _____
Town Manager/Deputy Town Manager

VENDOR:

By: _____

DRAFT

Florence Fire Department
72 East First Street
P.O. Box 2670
Florence, Arizona 85132
Phone: (520) 868-7609
Fax: (520) 868-7644

APPLICATION FOR OUTDOOR DISPLAY OF FIREWORKS PERMIT

Date of Application_____
**Allow 10 business days from a complete submittal for review and comments

APPLICANT INFORMATION

Name of Applicant _____ **Date of Birth**_____
**Lead Pyrotechnic Operator

Permanent Home Address_____

City_____ **State**_____ **Zip**_____

Home Phone (____)_____ **Work Phone** (____)_____

Local Address _____

24 Hour Emergency Phone Number (____)_____

Phoenix FD Shooters Card _____ **BATF Permit Number** _____
**Provide copies of each

DISPLAY SITE INFORMATION

Date of Display:_____ **Start Time:** _____ **End Time:** _____

Alternate Date: _____

Address/Location of Display _____
**Attach Site Plan

Expected Arrival Date of Fireworks to Site _____ **Time** _____

Name of Event _____

Description of Event _____

Property Owner Name _____
**Attach additional sheets if more than one property owner is involved, provide written permission, lease, etc.

Address _____

City _____ **State** _____ **Zip** _____

Phone (____)_____

SPONSOR INFORMATION

Corporate or Company Name _____

Contact Person _____ Address _____

City _____ State _____ Zip _____ Phone (____) _____

MONITOR COORDINATOR

Name _____ DOB _____ Address _____

City _____ State _____ Zip _____ Phone (____) _____

INSURANCE INFORMATION

Insurance Carrier _____ Policy Number _____

**Submit a copy of insurance certificate

Issue Date _____ Public Liability Amount $1,000,000

**Minimum amount

FIREWORKS SUPPLIER

Company Name _____

**Supply copy of invoice—listing type, quantity and total weight

Address _____

City _____ State _____ Zip _____

Contact Person _____ 24 Hour Emergency Phone (____) _____

TRANSPORTATION OF FIREWORKS

Company Name _____

Address _____

City _____ State _____ Zip _____

Contact Person _____ 24 Hour Emergency Phone (____) _____

Hazardous Materials Transportation Permit Number _____

**Provide Copy of Permit

Manner of Storage and Location of Display Fireworks Pre-Event _____

_____

Manner of Storage and Location of Display Fireworks Post-Event _____

_____

COMMUNICATIONS

Detail communication system for Monitors and Assistants _____

**Provide additional sheets if necessary

Emergency communication for Sponsor and Spectator Area _____

Reporting an emergency 911 24 Hour On Site Phone (____) _____

**All employees and agents to be trained **Must be accessible to all employees and agents

ASSISTANTS, EMPLOYEES, MONITORS AND AGENTS

List Assistant(s) that will handle display fireworks—Must be 18 years old

Name _____ **DOB** _____ **Address** _____

City _____ **State** _____ **Zip** _____ **Phone** (____)_____

Name _____ **DOB** _____ **Address** _____

City _____ **State** _____ **Zip** _____ **Phone** (____)_____

Name _____ **DOB** _____ **Address** _____

City _____ **State** _____ **Zip** _____ **Phone** (____)_____

List monitors, employees, agents and additional assistants on the provided ATTACHMENT. A minimum of four Monitors is required and they must be at least 18 years old. List of additional assistants, monitors, employees and agents may be submitted on the day of event.

Failure to submit all information detailed in the Florence Fire Department Permit check list to obtain permit for outdoor fireworks display at the time of application will cause processing of the permit to be suspended or delayed.

ISSUANCE OF A PERMIT CONSTITUTES PERMISSION TO STORE, USE OR HANDLE, OR TO CONDUCT PROCESSES WHICH PRODUCE CONDITIONS HAZARDOUS TO LIFE OR PROPERTY. SUCH PERMISSION SHALL NOT BE CONSTRUED AS AUTHORITY TO VIOLATE, CANCEL OR SET ASIDE ANY PROVISIONS OF THE 2006 INTERNATIONAL FIRE CODE, NFPA STANDARDS, OR ANY OTHER APPLICABLE LAW OR REGULATION.

I have received a copy of, have read and understand FLORENCE FIRE DEPARTMENT PERMIT CHECK LIST for outdoor displays of fireworks, and agree to comply with all terms, provisions and conditions of the 2006 International fire code, NFPA, as well as any other applicable Town, County or State regulations and Requirements.

Permit applicant agrees to carry out all aspects of the Outdoor Fireworks Display in compliance with the 2006 International Fire Code and all other laws or regulations applicable thereto, whether specified or not, and in complete accordance with the approved plans and specification. Permits which purport to sanction violations of the 2006 International Fire Code or any applicable law or regulation shall be void and approvals of plans and specifications in issuance of such permits shall likewise be void.

Signature of Applicant: _____ **Date** _____

Plans and Specifications Approved by Florence Fire Department

_____ **Date** _____

Plan Reviewer

ATTACHMENT

ASSISTANTS, EMPLOYEES, MONITORS AND AGENTS

LIST ASSISTANT(S) THAT WILL HANDLE DISPLAY FIREWORKS—Must be 18 years old

Name _____ DOB _____ Address _____

City _____ State _____ Zip _____ Phone (____) _____

Name _____ DOB _____ Address _____

City _____ State _____ Zip _____ Phone (____) _____

LIST MONITORS TO HANDLE CROWD CONTROL—Must be 18 years old

Name _____ DOB _____ Address _____

City _____ State _____ Zip _____ Phone (____) _____

Name _____ DOB _____ Address _____

City _____ State _____ Zip _____ Phone (____) _____

Name _____ DOB _____ Address _____

City _____ State _____ Zip _____ Phone (____) _____

Name _____ DOB _____ Address _____

City _____ State _____ Zip _____ Phone (____)

Name _____ DOB _____ Address _____

City _____ State _____ Zip _____ Phone (____) _____

LIST OTHER EMPLOYEES OR AGENTS

Name _____ DOB _____ Address _____

City _____ State _____ Zip _____ Phone (____) _____

Name _____ DOB _____ Address _____

City _____ State _____ Zip _____ Phone (____) _____

ATTACHMENT

ASSISTANTS, EMPLOYEES, MONITORS AND AGENTS

LIST ASSISTANT(S) THAT WILL HANDLE DISPLAY FIREWORKS—Must be 18 years old

Name _____ **DOB** _____ **Address** _____

City _____ **State** _____ **Zip** _____ **Phone** (____) _____

Name _____ **DOB** _____ **Address** _____

City _____ **State** _____ **Zip** _____ **Phone** (____) _____

LIST MONITORS TO HANDLE CROWD CONTROL—Must be 18 years old

Name _____ **DOB** _____ **Address** _____

City _____ **State** _____ **Zip** _____ **Phone** (____) _____

Name _____ **DOB** _____ **Address** _____

City _____ **State** _____ **Zip** _____ **Phone** (____) _____

Name _____ **DOB** _____ **Address** _____

City _____ **State** _____ **Zip** _____ **Phone** (____) _____

Name _____ **DOB** _____ **Address** _____

City _____ **State** _____ **Zip** _____ **Phone** (____)

Name _____ **DOB** _____ **Address** _____

City _____ **State** _____ **Zip** _____ **Phone** (____) _____

LIST OTHER EMPLOYEES OR AGENTS

Name _____ **DOB** _____ **Address** _____

City _____ **State** _____ **Zip** _____ **Phone** (____) _____

Name _____ **DOB** _____ **Address** _____

City _____ **State** _____ **Zip** _____ **Phone** (____) _____

Florence Fire Department

72 East First Street Post Office Box 2670 Florence, Arizona 85132
(520) 868-7609 Fax: (520) 868-7644

Florence Fire Department Permit Check List:

PURPOSE:

To provide information and guidelines for issuing permits and inspecting pyrotechnic displays.

PROCEDURE:

Fireworks are regulated under the currently adopted edition of the International Fire Code, NFPA 1123 and NFPA 1126.

An operational permit is required for the use and handling of pyrotechnic special effects material. Permits shall be issued by Fire Prevention upon review and approval of a special events application. To apply for a fireworks permit, an applicant must submit the following information.

- Special Event Application
- Detailed site plan with dimensions
- List of aerial effects to be used, number and size
- List of pyrotechnic operators/assistants and their certification or fitness cards
- Certificate of liability insurance
- Permit fee

Site Assessment

Prior to issuing a permit for fireworks, it will be necessary to conduct a site survey to verify proximity to buildings, highways, overhead obstructions and audience areas. The minimum separation distance from mortars to spectators is specified in NFPA 1123 Table 5.1.3.1 Spectator parking areas and structures shall not be located within the display site. Exception: Unoccupied structures with the approval of the building owner and fire code official. The trajectory of the shells shall not come within 25' of any overhead object. Vegetation modification may be required within the fallout area.

Inspection Checklist

Upon approval of the fireworks permit, an inspection shall be conducted the day of the event. The following items shall be addressed prior to, during and after the display.

Notify the Fire Chief or Battalion Chief and coordinate standby personnel.

- Identify the pyrotechnic operator and verify that his/her name appears on the operator list(permit) and cross out all names not present. Only those listed on the permit are allowed to shoot.
- Identify the assistants and verify that their names appear on the assistants list. Cross out the name of any assistant who is not present. Any new assistant not listed must show proof that they are over 18 years old, then list them.
- Verify the operators and assistants have the proper personal protective equipment and are wearing it during set-up and clean-up. All personnel in the discharge site shall wear head protection, eye protection, hearing protection, foot protection and cotton, wool or similarly flame-resistant long-sleeved, long-legged clothing.
- Verify that the fallout area is clear of any tall grass, weeds, and/or other combustible material.
- Verify the proper distances to spectator areas have been met. Mortars require 70 feet radius per inch of aerial shell. Ground pieces must be located 150 feet from spectators and vehicles.
- Aerial shells shall be shot straight up or angled to allow for wind to carry shells away from the main spectator viewing area.
- Verify that the fallout area is secured. No one is allowed in the fallout area except the operator, assistants, and FD/PD personnel. No one is allowed in the discharge area (immediate area surrounding the fireworks mortars) except the operator and assistants during the shoot.
- Potential entry points for spectators into the fallout area must be secured by security personnel prior to the start of the show, i.e. barricades, tape, etc.

- Evidence of drug or alcohol use by the shooters or assistants shall halt setup and the individual shall be removed from the area. Contact the fireworks company to send out another approved shooter and request assistance from the PD to secure the site. Impaired operators shall not be allowed to remain on site or move any explosives.
- Trucks used for transporting explosives shall be placarded on all sides, parked a minimum of 50 feet from the set-up site and not be left unattended.
- Verify that the mortars and racks used for aerial displays are securely constructed, (no loose nails), and set so they cannot fall over during the shoot. You may request additional stakes, tie wire, legs, etc if there is a stability concern.
- Verify that the assistants have fire extinguishers, shovels, water tender and/or other firefighting equipment.
- Verify that any pyrotechnic materials are stored in a ready box, magazine or corrugated DOT container, water tight and secured from sparks or burning material from lift-charge debris, low breaks or muzzle breaks.
- Verify that mortars are inspected and shells handled properly. Prior to placement, mortars shall be inspected for defects, such as dents, cracks, bent ends, damaged interiors and damaged plugs. Defective mortars shall not be used.
- Shells having tears, leaks, broken fuses or signs of having been wet shall not be fired. Aerial shells shall be carried to mortars by the shell body and loaded by holding the thick portion of the fuse.
- Verify that there is no smoking within 50 feet of the discharge area.
- Verify that the weather conditions are favorable. Contact dispatch for current wind speeds when in question. Wind speeds in excess of 15mph are cause for postponing or canceling the show.
- Establish a means of communication between you and the shooter in the event of an emergency. Do not enter the discharge area once the show begins.
- Misfired shells shall be marked (duct or masking tape) and not reloaded or reused.
- Operators shall maintain a 75 foot distance from mortars when using electrically fired displays. Electrically fired displays shall be separated from manually fired displays by a 25 foot minimum distance.
- After the show, maintain security of the fallout area until the operator declares it safe.
- Post show inspections for unfired shells or live components shall be conducted by the operator immediately following the show or at first light.

FIREWORKS CHECK LIST

72 East First Street **Post Office Box 2670** **Florence, Arizona 85132**
(520) 868-7609 **Fax: (520) 868-7644**

- ☐ Identify the pyrotechnic operator and verify that his/her name appears on the operator list(permit) and cross out all names not present. Only those listed on the permit are allowed to shoot.
- ☐ Identify the assistants and verify that their names appear on the assistants list. Cross out the name of any assistant who is not present. Any new assistant not listed must show proof that they are over 18 years old, then list them.
- ☐ Verify the operators and assistants have the proper personal protective equipment and are wearing it during set-up and clean-up. All personnel in the discharge site shall wear head protection, eye protection, hearing protection, foot protection and cotton, wool or similarly flame-resistant long-sleeved, long-legged clothing.
- ☐ Verify that the fallout area is clear of any tall grass, weeds, and/or other combustible material.
- ☐ Verify the proper distances to spectator areas have been met. Mortars require 70 feet radius per inch of aerial shell. Ground pieces must be located 150 feet from spectators and vehicles.
- ☐ Aerial shells shall be shot straight up or angled to allow for wind to carry shells away from the main spectator viewing area.
- ☐ Verify that the fallout area is secured. No one is allowed in the fallout area except the operator, assistants, and FD/PD personnel. No one is allowed in the discharge area (immediate area surrounding the fireworks mortars) except the operator and assistants during the shoot.
- ☐ Potential entry points for spectators into the fallout area must be secured by security personnel prior to the start of the show, i.e. barricades, tape, etc.
- ☐ Evidence of drug or alcohol use by the shooters or assistants shall halt setup and the individual shall be removed from the area. Contact the fireworks company to send out another approved shooter and request assistance from the PD to secure the site. Impaired operators shall not be allowed to remain on site or move any explosives.
- ☐ Trucks used for transporting explosives shall be placarded on all sides, parked a minimum of 50 feet from the set-up site and not be left unattended.
- ☐ Verify that the mortars and racks used for aerial displays are securely constructed, (no loose nails), and set so they cannot fall over during the shoot. You may request additional stakes, tie wire, legs, etc if there is a stability concern.
- ☐ Verify that the assistants have fire extinguishers, shovels, water tender and/or other firefighting equipment.
- ☐ Verify that any pyrotechnic materials are stored in a ready box, magazine or corrugated DOT container, water tight and secured from sparks or burning material from lift-charge debris, low breaks or muzzle breaks.
- ☐ Verify that mortars are inspected and shells handled properly. Prior to placement, mortars shall be inspected for defects, such as dents, cracks, bent ends, damaged interiors and damaged plugs. Defective mortars shall not be used.
- ☐ Shells having tears, leaks, broken fuses or signs of having been wet shall not be fired. Aerial shells shall be carried to mortars by the shell body and loaded by holding the thick portion of the fuse.
- ☐ Verify that there is no smoking within 50 feet of the discharge area.
- ☐ Verify that the weather conditions are favorable. Contact dispatch for current wind speeds when in question. Wind speeds in excess of 15mph are cause for postponing or canceling the show.
- ☐ Establish a means of communication between you and the shooter in the event of an emergency. Do not enter the discharge area once the show begins.

- ☐ Misfired shells shall be marked (duct or masking tape) and not reloaded or reused.
- ☐ Operators shall maintain a 75 foot distance from mortars when using electrically fired displays. Electrically fired displays shall be separated from manually fired displays by a 25 foot minimum distance.
- ☐ After the show, maintain security of the fallout area until the operator declares it safe.
- ☐ Post show inspections for unfired shells or live components shall be conducted by the operator immediately following the show or at first light.

_____ Date_____
Fire Chief

_____ Date_____
Pyrotechnic Engineer

AMENDMENT TO PROFESSIONAL SERVICES AGREEMENT

OWNER: Town of Florence
Attn: Brent Billingsley, Town Manager
P.O. Box 2670
775 N. Main Street
Florence, AZ 85132

VENDOR: Lants Productions, Inc.
P.O. Box 491
Draper, UT 84020

Date: April 1, 2019

Amendment No.: 1

Name of Project: Fourth of July Freedom Fest

Description of Amendment to Agreement

Amendment authorizing Lantis Productions, Inc. (DBA Lantis Fireworks and Lasers) to provide the fireworks display for an additional year for the annual Fourth of July Freedom Fest scheduled for July 4, 2019, for $18,000.00.

Authorized Amendment to Contract Price: $18,000.00

Change in Agreement Time: NA (Calendar Days)

New Authorized Agreement Total: $36,000.00

Summary of Agreement and Amendments:

$18,000.00	Agreement - February 26, 2018
$18,000.00	Amendment #1 - April 1, 2019
$36,000.00	Amended Contract Price

OWNER:

Town of Florence
(Name of Owner)

(Signature)

Tara Walter
(Printed Name)

Mayor
(Title)

Date:

DESIGN-BUILDER:

Lantis Fireworks and Lasers
(Name of Design-Builder)

(Signature)

Kenneth L Lants
(Printed Name)

President
(Title)

Date: 3/18/2019

	TOWN OF FLORENCE COUNCIL ACTION FORM	**AGENDA ITEM 7b.**

MEETING DATE: April 1, 2019

DEPARTMENT: Public Works Department

STAFF PRESENTER: Christopher A. Salas, P.E.

SUBJECT: Zumar Industries Inc. contract to purchase various signs, poles and pole accessories for all signage using the MCDOT Co-operative Contracts, Serial 16136-C and Serial 14105-C,

☒ **Action**
☐ **Information Only**
☐ **Public Hearing**
☐ **Resolution**
☐ **Ordinance**
- ☐ **Regulatory**
- ☐ **1st Reading**
- ☐ **2nd Reading**

☐ **Other**

STRATEGIC PLAN REFERENCE:

☐ Community Vitality ☐ Economic Prosperity ☐ Leadership and Governance

☐ Partnerships and Relationships ☒ Transportation and Infrastructure

☐ Statutory ☐ None

RECOMMENDED MOTION/ACTION:

Motion to enter into a contract with Zumar Industries Inc. to purchase various street, warning and informational signs as well as poles and pole accessories for all signage within the Town of Florence Town limits using the MCDOT Co-operative Contracts, Serial 16136-C and Serial 14105-C, in an amount not to exceed of $60,000, with a ratification of $29,338.02.

BACKGROUND/DISCUSSION:

The Town currently has an inventory system of all the in-place signs as well as back stock of signs warehoused at the Public Works campus. Signs are needed to replace sun-worn signs that are no longer reflective enough for night visibility and for immediate replacement of signs that are damaged.

The Town is also working on replacing all the U-channel poles with the currently Federal Highway Administration (FHWA) approved square, break away poles. The square break-away poles are proven to cause less damage to vehicles when impacted.

A VOTE OF NO WOULD MEAN:

Another year of sun damaged signs with low reflectivity and a limited inventory of new signs; falling further behind in replacing U-channel poles with the breakaway square poles.

A VOTE OF YES WOULD MEAN:

Enable the Town of Florence to replace damaged signage throughout the Town and keep a usable inventory on hand. Continue upgrading the U-channel poles with the square, break away poles.

FINANCIAL IMPACT:

The cost to contract with Zumar should not exceed $60,000, with a ratification of $29,338.02.

ATTACHMENTS:

Exhibit 1 – Maricopa County Solicitations
Exhibit 2 – MCDOT Cooperative Contracts: 16136-C, expiring 9/30/19 and expiring and Serial 14105-C, expiring 1/31/20
Exhibit 3 – Approved Bid Tabulation Form
Exhibit 4 - Town of Florence Contract with Zumar Industries

ADDENDUM #1 (DTD. 06/21/16) PLEASE SEE CHANGES TO SECTIONS 2.2.13.1 (SECOND PARAGRAPH), 2.3.13.1 (SECOND PARAGRAPH), 2.3.15.3 AND EXHIBIT 2

NOTICE OF SOLICITATION

SERIAL 16136-C

INVITATION FOR BID FOR: **Traffic Signing Materials**

Notice is hereby given that Maricopa County is conducting this invitation for bids, electronically through an outside agent, BidSync.com, until **2:00 P.M./M.S.T.** on **July 5, 2016** for **SERIAL#16136-C INVITATION FOR BID FOR Traffic Signing Materials** for Maricopa County.

To participate in this bidding process, vendors shall register through BidSync.com. To register with BidSync, please go to www.BidSync.com and click on the orange 'Register' link. Registration has no cost, and will allow you to access all of the bid information, bid documents, receive bid notifications, and submit a response. **ONLY RESPONSES THAT ARE SUBMITTED THROUGH BIDSYNC.COM WILL BE CONSIDERED FOR AWARD.**

For assistance, please contact BidSync Vendor Support Department via phone or email, during regular business hours: 1-800-990-9339 or agencysupport@BidSync.com

All responses shall be submitted **electronically** to BidSync.com prior to the bid closing. The bid will be listed under **"16136-C INVITATION FOR BID FOR** Traffic Signing Materials."

The Maricopa County Procurement Code ("The Code") governs this procurement and is incorporated by reference. Any protest concerning this Invitation for Bid must be filed with the Procurement Officer in accordance with Section MC1-905 of the Code.

ALL ADMINISTRATIVE INFORMATION CONCERNING THIS INVITATION FOR BID CAN BE LOCATED AT http://www.maricopa.gov/procurement/

ANY ADDENDA TO THIS INVITATION FOR BID WILL BE POSTED ON THE MARICOPA COUNTY OFFICE OF PROCUREMENT SERVICES WEB SITE UNDER THE SOLICITATION SERIAL NUMBER. THIS INFORMATION WILL ALSO BE POSTED ONLINE AT .

FAILURE TO REVIEW ANY ADDENDA DOES NOT NEGATE YOUR INITIAL OFFER AND HOLDS THE RESPONDENT RESPONSIBLE FOR ANY CHANGES PRIOR TO BID CLOSING.

DIRECT ALL INQUIRIES TO:
Nick Perrera
PROCUREMENT OFFICER
TELEPHONE: (602) 506-3274
EMAIL: perreran@mail.maricopa.gov

THERE WILL BE AN OPTIONAL PRE-BID CONFERENCE ON JUNE 20, 2016 AT 1:30 PM AT THE MARICOPA COUNTY DEPARTMENT OF TRANSPORTATION, 2901 W DURANGO ST, PHOENIX, AZ 85009, APACHE CONFERENCE ROOM. A CALL-IN LINE WILL BE AVAILABLE AT 602-506-9695 PASSCODE 671693.

NOTE: MARICOPA COUNTY PUBLISHES ITS SOLICITATIONS ONLINE AND THEY ARE AVAILABLE FOR VIEWING AND/OR DOWNLOADING AT THE FOLLOWING INTERNET ADDRESS:

http://www.maricopa.gov/procurement/solicitation.aspx

TABLE OF CONTENTS

NOTICE OF SOLICITATION

TABLE OF CONTENTS

SECTIONS:

1.0 INTENT

2.0 SPECIFICATIONS

3.0 PURCHASING REQUIREMENTS

4.0 CONTRACTUAL TERMS & CONDITIONS

5.0 INSTRUCTIONS TO RESPONDENTS (This Section will not remain as part of any Resultant contract)

ATTACHMENTS:

ATTACHMENT A PRICING

ATTACHMENT B AGREEMENT PAGE

ATTACHMENT C REFERENCES

EXHIBITS:

EXHIBIT 1 VENDOR REGISTRATION PROCEDURES

~~EXHIBIT 2 SIGN DETAILS~~

EXHIBIT 3 SAMPLE INSURANCE CERTIFICATE

INVITATION FOR BID FOR: Traffic Signing Materials

1.0 INTENT:

The intent of this bid is to award a requirements contract for TRAFFIC SIGNING MATERIALS for the Maricopa County Department of Transportation. Also included are blanket discounts for related supplies as covered by current pricing documents. Amendments, supplements and/or revisions will be effective upon receipt and approval of notice to the Office of Procurement Services. Deliveries are to be made to the Maricopa County Department of Transportation Procurement-Distribution Center, 2222 South 27th Avenue, Phoenix, AZ 85009, as covered by purchase order.

Other governmental entities under agreement with the County may have access to services provided hereunder (see also Sections 3.14 and 3.15, below).

The County reserves the right to add additional contractors, at the County's sole discretion, in cases where the currently listed contractors are of an insufficient number or skill-set to satisfy the County's needs or to ensure adequate competition on any project or task order work.

2.0 SPECIFICATIONS:

2.1 ALUMINUM TRAFFIC SIGN BLANKS:

Each blank shall be degreased, etched, alodine coated in accordance with MIL-C-5541B or current spec, packaged for protection from dust and moisture and ready for application of either paint or reflective sheeting. Each blank shall be made of 5052-H38 or current spec, or better Alloy, governed by A.S.T.M. specification B-209-73 or latest revisions. Each blank shall be furnished with standard 3/8 inch hole locations and corner radii, unless otherwise noted, as shown on Maricopa County Department of Transportation, Standard Details 2061-1 through 2061-21.

2.2 REFLECTIVE SHEETING:

Reflective Sheeting used in the fabrication of traffic control signs shall meet the requirements of the FHWA specifications FP-03 and ASTM (D 4956) or current spec modified as noted hereinafter. Sheeting will be classified by type in accordance with Federal Standard Specifications FP-03 and ASTM (D 4956) or current spec and the following:

2.2.1 TYPE IV SHEETING:

Type IV is a high-intensity retroreflective sheeting to meet or exceed 3M high intensity prismatic grade 3930 or current spec, consisting of prismatic lens elements. The sheeting shall have a pre-coated equivalent or pressure sensitive adhesive and shall meet the minimum coefficients as required by ASTM D4956-09 Type IV or current spec.

2.2.2 TYPE VIII SHEETING:

Type VIII sheeting is an unmetallized microprismatic retroreflective element material. Equal to or exceeds 3M fluorescent orange prismatic work zone sheeting3924S diamond grade material. Type VIII sheeting shall meet the minimum coefficients of retroreflection as required by ASTM D4956-09 Type VIII or current spec.

2.2.3 TYPE XI SHEETING:

Type XI sheeting is an unmetallized microprismatic retroreflective element material meets or exceeds 3M DG3 diamond grade sheeting. Type XI sheeting shall meet the minimum coefficients of retroreflection as required by ASTM D4956-09 Type XI or current spec

2.2.4 The retroreflective sheeting (all types) shall comply with the liner removal and adhesive requirements contained in ASTM D 4956-09 sections 6.8 and 6.9.

2.2.5 Miscellaneous Sheeting Items/Reflective & Non-Reflective:

The manufacturer must provide documentation, to the satisfaction of the Engineer, for all sheeting types purchased by Maricopa County. The sheeting proposed must have been used successfully in a substantial traffic sign program under similar climatic conditions for at least three years.

2.2.6 NON-REFLECTIVE VINYL SHEETING AND OVERLAYS:

2.2.6.1 Non-reflective vinyl sheeting in various colors. Durable, dimensionally stable vinyl that is pressure sensitive for commercial and industrial type applications which will withstand severe weather and handling conditions.

2.2.6.2 Electronic cutable acrylic overlay, films, the sheeting manufacturer shall manufacture electronic cutable acrylic films in the standard traffic control colors, which shall be part of sheeting matched components, in non-perforated, transparent and non-reflective film. When used in accordance with the sheeting manufacturer's instructions, shall not be less the warranty term of the sheeting material (all Types).

2.2.6.3 Graffiti film protective overlay. 3M 1160 or current spec or equivalent. The sheeting manufacturer shall also manufacture clear protective overlays which are compatible with the sheeting's & when used in accordance with the sheeting manufacturer's instructions, shall not lessen the warranty term of the sheeting material (all types).

2.2.7 COLOR REQUIREMENTS:

Conformance to color requirements shall be determined spectrophotometrically in accordance with ASTM E 1164, with instruments utilizing either 45/0 or 0/45 illumination/viewing conditions as described for the 2 degree standard observer and CIE illuminant D65 or current spec in accordance with ASTM E 308 or current spec. For either method, material reference standards used to calibrate the test instrument shall be retroreflective reference standards which have been recently calibrated on a spectrophotometer

2.2.8 SPECIFIC INTENSITY PER UNIT AREA (SIA):

For screen-printed transparent colored areas on white sheeting, the SIA values shall not be less than 70% or current spec of the values for the corresponding color in the applicable table.

2.2.9 SHRINKAGE:

Retroreflective sheeting (all types) shall meet the shrinkage requirements of ASTM D4956-09 section 6.6 or current spec.

2.2.10 FLEXIBILITY:

The retroreflective sheeting (all types) shall meet the flexibility requirements of ASTM D4956-09 section 6.7 or current spec.

2.2.11 ACCELERATED OUTDOOR WEATHERING:

The retroreflective sheeting (all types) shall meet the accelerated outdoor weathering and colorfastness requirements of ASTM D4956-09 section 6.4 and 6.5 or current spec.

2.2.12 PERFORMANCE REQUIREMENTS AND OBLIGATIONS TYPE IV:

2.2.12.1 Field Performance Requirements:

Type IV sheeting processed and applied to sign blank materials in accordance with the sheeting manufacturer's recommendations shall perform effectively for the number of years stated in this sub article. The retroreflective sheeting will be considered unsatisfactory if tint has deteriorated due to natural causes to the extent that: (1) the sign is ineffective for its intended purpose when viewed from a moving vehicle under normal day and night driving conditions; or (2) Sheeting manufactured of ordinary colors and processed and applied to sign blank materials in accordance with sheeting manufacturer's recommendations, shall perform effectively for at least 10 years or current spec. The retroreflective sheeting will be considered unsatisfactory if it has deteriorated due to natural causes to the extent that: (1) the sign is ineffective for its intended purpose when viewed from a moving vehicle under normal day and night driving conditions; or (2) the coefficient of retroreflection is less than the minimum specified for that sheeting during that period listed. 80% of initial minimum coefficients of retroreflection for type IV up to 7 years and 70% of values up to 10 years or current spec. Failure of process colors or overlay films provided and/or sold for use on recommended sheeting shall constitute a failure of the sign and shall be replaced under the manufacturer's replacement obligations. For screen printed transparent colored areas or transparent colored overlay films on white sheeting, the coefficients of retroreflection shall not be less than 70% of the values for the corresponding integral color. All measurements shall be made after sign cleaning according to the sheeting manufacturer's recommendations.

2.2.12.2 Sheeting Manufacturer's Replacement Obligation:

For ordinary colors where it can be shown that retroreflective signs, supplied and used according to the sheeting manufacturer's recommendations, have not met the performance requirements the sheeting manufacturer shall cover restoration costs as follows for sheeting's shown to be unsatisfactory during: For the entire 10 years or current spec, the sheeting manufacturer will replace the sheeting required to restore the sign surface to its original effectiveness. In addition, during the first seven years the sheeting manufacturer will cover the cost of restoration of the sign surface to its original effectiveness at no cost to agency for materials and labor.

2.2.13 PERFORMANCE REQUIREMENTS AND OBLIGATIONS TYPE XI:

2.2.13.1 Field Performance Requirements:

Type XI For Permanent Signing – Ordinary Colors: Sheeting manufactured of ordinary colors and processed and applied to sign blank materials in accordance with sheeting manufacturer's recommendations, shall perform effectively for at least 12 years or current spec. The retroreflective sheeting will be considered unsatisfactory if it has deteriorated due to natural causes to the extent that: (1) the sign is ineffective for its intended purpose when viewed from a moving vehicle under normal day and night driving conditions; or (2) the coefficient of retroreflection is less than the minimum specified for that sheeting during that period listed. 80% of initial minimum coefficients of retroreflection for type XI up to 7 years and 70% of values up to 12 years or current spec. Failure of process colors or overlay films provided and/or sold for use on recommended sheeting shall constitute a failure of the sign and shall be replaced under the manufacturer's replacement obligations. For screen printed transparent colored areas or transparent colored overlay films on white sheeting, the coefficients of retroreflection shall not be less than 70%

of the values for the corresponding integral color. All measurements shall be made after sign cleaning according to the sheeting manufacturer's recommendations.

Type XI For Permanent Signing – Fluorescent Colors: Sheeting manufactured of fluorescent colors and processed and applied to sign blank materials in accordance with sheeting manufacturer's recommendations shall perform effectively for the number of years stated in this specification. The retroreflective sheeting will be considered unsatisfactory if it has deteriorated due to natural causes to the extent that: (1) the sign is ineffective for its intended purpose when viewed from a moving vehicle under normal day and night driving conditions; or (2) the coefficient of retroreflection is less than the minimum specified for that sheeting during that period listed. 80% of initial minimum required coefficients of retroreflection for type XI values for 5 years and 70% of values up to ~~10~~ 7 years or current spec. Failure of process colors or overlay films provided and/or sold for use on recommended sheeting shall constitute a failure of the entire sign and shall be replaced under the manufacturer's replacement obligations. All measurements shall be made after sign cleaning according to sheeting the manufacturer's recommendations.

Type XI For Temporary Signing – Fluorescent Orange Colors Sheeting manufactured of fluorescent orange and applied to sign blank material in accordance with the sheeting manufacturer's recommendations, is expected to perform effectively for a minimum of three years. The retroreflective sheeting will be considered unsatisfactory if it has deteriorated due to natural causes to the extent that: (1) the sign is ineffective for its intended purpose or (2) retains less than 50% of the minimum coefficient of retroreflection values at 0.2 degrees observation, -4 degrees entrance (measured in accordance with ASTM E810) or current spec. All measurements shall be made after sign cleaning according to the sheeting manufacturer's recommendations. Natural causes include effects of exposure to weather. Natural causes exclude (without limitation) damage from exposure to chemicals, abrasion and other mechanical damage (such as from fasteners used to mount the sign, collisions or mishandling), vandalism, or malicious mischief.

2.2.13.2 Sheeting Manufacturer's Replacement Obligation:

For ordinary colors where it can be shown that retroreflective signs, supplied and used according to the sheeting manufacturer's recommendations, have not met the performance requirements the sheeting manufacturer shall cover restoration costs as follows for sheeting's shown to be unsatisfactory during: For the entire 12 years, the sheeting manufacturer will replace the sheeting required to restore the sign surface to its original effectiveness. In addition, during the first seven years the sheeting manufacturer will cover the cost of restoration of the sign surface to its original effectiveness at no cost to agency for materials and labor. For fluorescent colors where it can be shown that retroreflective signs, supplied and used according to the sheeting manufacturer's recommendations, have not met the performance requirements, the sheeting manufacturer shall cover restoration costs as follows for sheeting's shown to be unsatisfactory: If the failure occurs within the first 5 years from the date of fabrication, the manufacturer will, at its expense, restore the sign surface to its original effectiveness. If the failure occurs within the 6th to 10th year from the date of fabrication, the manufacturer will furnish the necessary amount of sheeting necessary to restore the sign surface to its original effectiveness. Replacement sheeting shall carry the unexpired warranty of the sheet. For temporary signing, fluorescent orange, where it can be shown that the retroreflective sheeting fails to conform to the performance requirements, the sheeting manufacturer's sole responsibility and purchaser's and user's exclusive remedy shall be: Provide replacement

sheeting. This sheeting shall carry the unexpired warranty of the sheeting it replaces

2.2.14 PERFORMANCE REQUIREMENTS AND OBLIGATIONS TYPE VIII:

2.2.14.1 Field Performance Requirements:

Retroreflective sheeting processed and applied in accordance with the sheeting manufacturers recommendations, is expected to perform effectively for a minimum of three years. The retroreflective sheeting will be considered unsatisfactory if it has deteriorated due to natural causes to the extent that: (1) the sign is ineffective for the intended purpose or (2) the coefficient of retroreflection, after cleaning is less than a minimum of 115 cd/fc/ft2 at 0.2/-4. All measurements shall be made after sign cleaning according to the sheeting manufacturers recommendations. Natural causes include effects of exposure to weather. Natural causes exclude (without limitation) damage from exposure to chemicals, abrasion, and other mechanical damage (such as from fasteners used to mount the sign, collisions or mishandling) , vandalism, or malicious mischief.

2.2.14.2 Sheeting Manufacturer's Replacement Obligation:

Where it can be shown that the retroreflective sheeting fails to conform to the performance requirements, the sheeting manufacturer's sole responsibility and purchaser's and user's exclusive remedy shall be: Replacement sheeting shall carry the unexpired warranty of the sheeting it replaces.

2.3 READY-MADE SIGNS:

2.3.1 TYPE IV SHEETING:

Type IV is a high-intensity retroreflective sheeting to meet or exceed 3M high intensity prismatic grade 3930, consisting of prismatic lens elements. The sheeting shall have a pre-coated equivalent or pressure sensitive adhesive and shall meet the minimum coefficients as required by ASTM D4956-09 Type IV or current spec.

2.3.2 TYPE VIII SHEETING:

Type VIII sheeting is an unmetallized microprismatic retroreflective element material. Equal to or exceeds 3M fluorescent orange prismatic work zone sheeting 3924S diamond grade material. Type VIII sheeting shall meet the minimum coefficients of retroreflection as required by ASTM D4956-09 Type VIII or current spec.

2.3.3 TYPE XI SHEETING:

Type XI sheeting is an unmetallized microprismatic retroreflective element material meets or exceeds 3M DG3 diamond grade sheeting. Type XI sheeting shall meet the minimum coefficients of retroreflection as required by ASTM D4956-09 Type XI or current spec..

2.3.4 THE RETROREFLECTIVE SHEETING

(All types) shall comply with the liner removal and adhesive
Requirements contained in ASTM D 4956-09 sections 6.8 and 6.9 or current spec..

2.3.5 MISCELLANEOUS SHEETING ITEMS/REFLECTIVE & NON-REFLECTIVE:

The manufacturer must provide documentation, to the satisfaction of the Engineer, for all sheeting types purchased by Maricopa County. The sheeting proposed must have been used successfully in a substantial traffic sign program under similar climatic conditions for at least three years.

2.3.6 NON-REFLECTIVE VINYL SHEETING, & OVERLAYS:

2.3.6.1 Non-reflective vinyl sheeting in various colors. Durable, dimensionally stable vinyl that is pressure sensitive for commercial and industrial type applications which will withstand severe weather and handling conditions.

2.3.6.2 Electronic cuttable Acrylic overlay film The sheeting manufacturer shall manufacture electronic cuttable acrylic overlay films in standard traffic colors which shall be part of sheeting matched component system. in non-perforated, transparent and non-reflective film. Standard Colors

2.3.6.3 Graffiti film protective overlay **3M 1160 or equivalent or current spec.** The sheeting manufacturer shall also manufacture clear protective overlays which are compatible with the sheeting's & when used in accordance with the sheeting manufacturer's instructions, shall not lessen the warranty term of the sheeting material (all types).

2.3.7 COLOR REQUIREMENTS:

Conformance to color requirements shall be determined spectrophotometrically in accordance with ASTM E 1164 or current spec, with instruments utilizing either 45/0 or 0/45 illumination/viewing conditions as described for the 2 degree standard observer and CIE illuminant D65 in accordance with ASTM E 308. For either method, material reference standards used to calibrate the test instrument shall be retroreflective reference standards which have been recently calibrated on a spectrophotometer

2.3.8 SPECIFIC INTENSITY PER UNIT AREA (SIA):

For screen-printed transparent colored areas on white sheeting, the SIA values shall not be less than 70% of the values for the corresponding color in the applicable table.

2.3.9 SHRINKAGE:

Retroreflective sheeting (all types) shall meet the shrinkage requirements of ASTM D4956-09 section 6.6.

2.3.10 FLEXIBILITY:

(The retroreflective sheeting (all types) shall meet the flexibility requirements of ASTM D4956-09 section 6.7.

2.3.11 ACCELERATED OUTDOOR WEATHERING:

The retroreflective sheeting (all types) shall meet the accelerated outdoor weathering and colorfastness requirements of ASTM D4956-09 section 6.4 and 6.5.

2.3.12 PERFORMANCE REQUIREMENTS AND OBLIGATIONS TYPE IV:

2.3.12.1 Field Performance Requirements:

Type IV sheeting processed and applied to sign blank materials in accordance with the sheeting manufacturer's recommendations shall perform effectively for

the number of years stated in this sub article. The retroreflective sheeting will be considered unsatisfactory if tint has deteriorated due to natural causes to the extent that: (1) the sign is ineffective for its intended purpose when viewed from a moving vehicle under normal day and night driving conditions; or (2) Sheeting manufactured of ordinary colors and processed and applied to sign blank materials in accordance with sheeting manufacturer's recommendations, shall perform effectively for at least 10 years. The retroreflective sheeting will be considered unsatisfactory if it has deteriorated due to natural causes to the extent that: (1) the sign is ineffective for its intended purpose when viewed from a moving vehicle under normal day and night driving conditions; or (2) the coefficient of retroreflection is less than the minimum specified for that sheeting during that period listed.80% of initial minimum coefficients of retroreflection for type IV up to 7 years and 70% of values up to 10 years Failure of process colors or overlay films provided and/or sold for use on recommended sheeting shall constitute a failure of the sign and shall be replaced under the manufacturer's replacement obligations. For screen printed transparent colored areas or transparent colored overlay films on white sheeting, the coefficients of retroreflection shall not be less than 70% of the values for the corresponding integral color. All measurements shall be made after sign cleaning according to the sheeting manufacturer's recommendations.

2.3.12.2 Sheeting Manufacturer's Replacement Obligation:

For ordinary colors where it can be shown that retroreflective signs, supplied and used according to the sheeting manufacturer's recommendations, have not met the performance requirements the sheeting manufacturer shall cover restoration costs as follows for sheeting's shown to be unsatisfactory during: For the entire 10 years, the sheeting manufacturer will replace the sheeting required to restore the sign surface to its original effectiveness. In addition, during the first seven years the sheeting manufacturer will cover the cost of restoration of the sign surface to its original effectiveness at no cost to agency for materials and labor.

2.3.13 PERFORMANCE REQUIREMENTS AND OBLIGATIONS TYPE XI:

2.3.13.1 Field Performance Requirements:

Type XI For Permanent Signing – Ordinary Colors: Sheeting manufactured of ordinary colors and processed and applied to sign blank materials in accordance with sheeting manufacturer's recommendations, shall perform effectively for at least 12 years. The retroreflective sheeting will be considered unsatisfactory if it has deteriorated due to natural causes to the extent that: (1) the sign is ineffective for its intended purpose when viewed from a moving vehicle under normal day and night driving conditions; or (2) the coefficient of retroreflection is less than the minimum specified for that sheeting during that period listed. 80% of initial minimum coefficients of retroreflection for type XI up to 7 years and 70% of values up to 12 years Failure of process colors or overlay films provided and/or sold for use on recommended sheeting shall constitute a failure of the sign and shall be replaced under the manufacturer's replacement obligations. For screen printed transparent colored areas or transparent colored overlay films on white sheeting, the coefficients of retroreflection shall not be less than 70% of the values for the corresponding integral color. All measurements shall be made after sign cleaning according to the sheeting manufacturer's recommendations.

Type XI For Permanent Signing – Fluorescent Colors: Sheeting manufactured of fluorescent colors and processed and applied to sign blank materials in

accordance with sheeting manufacturer's recommendations shall perform effectively for the number of years stated in this specification. The retroreflective sheeting will be considered unsatisfactory if it has deteriorated due to natural causes to the extent that: (1) the sign is ineffective for its intended purpose when viewed from a moving vehicle under normal day and night driving conditions; or (2) the coefficient of retroreflection is less than the minimum specified for that sheeting during that period listed. 80% of initial minimum required coefficients of retroreflection for type XI values for 5 years and 70% of values up to ~~10~~ **7** years Failure of process colors or overlay films provided and/or sold for use on recommended sheeting shall constitute a failure of the entire sign and shall be replaced under the manufacturer's replacement obligations. All measurements shall be made after sign cleaning according to sheeting the manufacturer's recommendations.

Type XI For Temporary Signing – Fluorescent Orange Colors Sheeting manufactured of fluorescent orange and applied to sign blank material in accordance with the sheeting manufacturer's recommendations, is expected to perform effectively for a minimum of three years. The retroreflective sheeting will be considered unsatisfactory if it has deteriorated due to natural causes to the extent that: (1) the sign is ineffective for its intended purpose or (2) retains less than 50% of the minimum coefficient of retroreflection values at 0.2 degrees observation, -4 degrees entrance (measured in accordance with ASTM E810) or current spec. All measurements shall be made after sign cleaning according to the sheeting manufacturer's recommendations. Natural causes include effects of exposure to weather. Natural causes exclude (without limitation) damage from exposure to chemicals, abrasion and other mechanical damage (such as from fasteners used to mount the sign, collisions or mishandling), vandalism, or malicious mischief.

2.3.13.2 Sheeting Manufacturer's Replacement Obligation:

For ordinary colors where it can be shown that retroreflective signs, supplied and used according to the sheeting manufacturer's recommendations, have not met the performance requirements the sheeting manufacturer shall cover restoration costs as follows for sheeting's shown to be unsatisfactory during: For the entire 12 years, the sheeting manufacturer will replace the sheeting required to restore the sign surface to its original effectiveness. In addition, during the first seven years the sheeting manufacturer will cover the cost of restoration of the sign surface to its original effectiveness at no cost to agency for materials and labor. For fluorescent colors where it can be shown that retroreflective signs, supplied and used according to the sheeting manufacturer's recommendations, have not met the performance requirements, the sheeting manufacturer shall cover restoration costs as follows for sheeting's shown to be unsatisfactory: If the failure occurs within the first 5 years from the date of fabrication, the manufacturer will, at its expense, restore the sign surface to its original effectiveness. If the failure occurs within the 6th to 10th year from the date of fabrication, the manufacturer will furnish the necessary amount of sheeting necessary to restore the sign surface to its original effectiveness. Replacement sheeting shall carry the unexpired warranty of the sheet. For temporary signing, fluorescent orange, where it can be shown that the retroreflective sheeting fails to conform to the performance requirements, the sheeting manufacturer's sole responsibility and purchaser's and user's exclusive remedy shall be: Provide replacement sheeting. This sheeting shall carry the unexpired warranty of the sheeting it replaces

2.3.14 PERFORMANCE REQUIREMENTS AND OBLIGATIONS TYPE VIII:

2.3.14.1 Field Performance Requirements:

Retroreflective sheeting processed and applied in accordance with the sheeting manufacturers recommendations, is expected to perform effectively for a minimum of three years. The retroreflective sheeting will be considered unsatisfactory if it has deteriorated due to natural causes to the extent that: (1) the sign is ineffective for the intended purpose or (2) the coefficient of retroreflection, after cleaning is less than a minimum of 115 cd/fc/ft2 at 0.2/-4. All measurements shall be made after sign cleaning according to the sheeting manufacturers recommendations. Natural causes include effects of exposure to weather. Natural causes exclude (without limitation) damage from exposure to chemicals, abrasion, and other mechanical damage (such as from fasteners used to mount the sign, collisions or mishandling) , vandalism, or malicious mischief.

2.3.14.2 Sheeting Manufacturer's Replacement Obligation:

Where it can be shown that the retroreflective sheeting fails to conform to the performance requirements, the sheeting manufacturer's sole responsibility and purchaser's and users exclusive remedy shall be: Replacement sheeting shall carry the unexpired warranty of the sheeting it replaces.

2.3.15 BASE METAL:

2.3.15.1 Description:

The base metal shall be new sheet aluminum of alloys 6061-T6 or 5052-H38 or current spec conforming to the requirements of ASTM Designation: B209 or current spec, the thickness of the aluminum sheet shall be as indicated on the Item Number Description unless otherwise specified. The alloy and temper designations shall be verified by mill certification. Each blank will be furnished with standard 3/8" hole locations and corner radii, unless otherwise noted, as shown on Maricopa County Department of Transportation, Standard Details 2061-1 through 2061-21

2.3.15.2 Fabrication:

The fabrication of all metal parts shall be accomplished in a uniform and workmanlike manner. The sign panels are to be cut as shown on the sign specification sheets. This dimensional tolerance of the panels shall be size and shape free of buckles, warp, dents, cockles, burrs, sharp edges and any other defects resulting from fabrication. All possible fabrications, including shearing, cutting and punching of holes shall be completed prior to the base metal pretreatment.

~~2.3.15.3 Stamping MCDOT:~~

~~The contractor shall stamp an impression of "MCDOT" with ¼" text height into the back of all aluminum blanks so that the image is lowered into the surface of the aluminum. It is the contractor's responsibility to make sure all dies are maintained to create a uniformed appearance. Any blanks that are not stamped "MCDOT" will be rejected.~~

2.3.16 SCREENING INKS, PROCESS PASTE, CLEARS AND THINNERS:

2.3.16.1 Pretreatment:

The front and back surfaces of the aluminum base metal shall be cleaned, deoxidized and coated with a light, tightly adherent chromated conversion coating free of any powdery residue. The base metal pretreatment process

shall be in conformance with Section 5, "Recommended Processing Methods" of ASTM Designation: B 449 or current spec. The coating weight shall be less 2 (10-34 mg/sq. ft.), with a median of 25 mg/sq. ft. as the optimum coating weight. All treatment tanks or spray applied pretreatment is performed by immersion methods. The tanks shall be of sufficient size to accommodate the complete panel. Titration equipment shall be available for the inspector's use to check the solution strengths.

The cleaned and coated base metal shall be handled only by a mechanical device or by operators wearing clean cotton or rubber gloves. After cleaning and coating operations, the panels shall be protected at all times from contact or exposure to grease oils, dust or other contaminants. Only those screening inks, process pastes clears and thinners recommended by the reflective sheeting manufacturer shall be used. All such materials shall be used only in accordance with sheeting manufacturer's recommendations for the items stated above.

Such recommendations shall be obtained in writing and a copy furnished to MCDOT . Any changes in those items stated above which a manufacturer deems necessary shall first be approved in writing by the MCDOT procurement representative.

2.3.17 OUTDOOR WEATHERABILITY:

The outdoor weatherability of the applied inks or paste shall be comparable to the outdoor durability of the reflective sheeting as stated in Section 2.3.11

2.3.18 ADHERENCE:

No process inks shall be removed when tested by applying cellophane tape over a properly cured, color processed area and removing the tape with one quick motion. The tape shall be 3M™ Company Scotch Brand Cellophane Tape No. 600, 3/4" wide or equal.

2.3.19 SOLVENT-RESISTANCE:

Screened sign faces shall be properly cured and solvent resistant to cleaning solvents recommended by the manufacturer of the reflective sheeting.

2.3.20 SIGN PANEL FABRICATION:

The message shall be one or a combination of the following types:

2.3.20.1 Direct screening or reverse screened. The finished screened sign shall comply with all requirements of these specifications, including color and reflectivity.

2.3.20.2 Pressure sensitive computer cut-out reflective sheeting of the same type as specified in Section 2.3.1 of these specifications. Such sheeting shall comply with all requirements of these specifications, including color and reflectivity.

2.3.20.3 Black pressure sensitive computer cut out non-reflective sheeting from the approved manufacturers will be permitted in lieu of black process paste.

2.3.20.4 The sign faces shall conform to the dimensions and letter series shown on Exhibits (1) through (21).

2.3.21 SPLICES IN REFLECTIVE SHEETING:

No finished sign panel shall have splices.

2.3.22 FINISH:

The finished signs shall be flat within a ratio of 0.04 inches per linear foot when measured across the plane of each panel from opposite corners or at any locations on the panel. All surface exposed to weathering shall be free of any defects in the coating that may impair the serviceability or detract from the general appearance or color matching of the sign. The finished sign shall be clean and free from all burrs, sharp edges, delaminated reflective sheeting and aluminum marks. Signs with any defects or damage that would affect their appearance or service ability will not be acceptable. No air pockets or bubbles shall exist between the sheeting and the base material.

2.3.23 INSPECTION:

All material and finished signs are subject to inspection by the County at the Traffic Operations office at the time of delivery. Signs not conforming in all respects to the requirements of these specifications will be returned to the Vendor for replacement at the cost of the Vendor.

2.3.24 SIGN RECYCLING:

All pricing shall be bid on a per square foot basis. Gross square footage of shapes (octagon, triangle, etc.) will be used for calculation purposes.

Example: 24" octagon equals 4.0 square feet

Bid price to include freight charges both ways. All recycled sign blanks shall be stripped using a mechanical process. Stripped sign blank thickness shall not be reduced more than 0.01" from original thickness.

Credit shall be provided for scrap metal received and shall be applied at the current, per pound, local recycling market rate. Credit amount shall be shown on the invoice. Contractor to state the market index to be used on their pricing page along with the margin % above or below this index.

2.3.25 SPECIAL SIGNS

Signs that are an urgent need or unusual size will be handled as a Task Order. A Task Order will consist of asking all listed vendors for pricing based on but not limited to, sign size information, drawing attachments, delivery cost and date. Award of a Task Order will be based on lowest cost submitted.

3.0 PURCHASING REQUIREMENTS:

3.1 DELIVERY AND INSTALLATION:

3.1.1 Delivery shall be F.O.B. Destination Freight Prepaid within seven (7) days of receipt of Using Agency purchase order, to any delivery location within Maricopa County.

3.1.2 Items confirmed by County to be Special Order, or non-regular are exempt from the seven day delivery receipt requirement. Delivery time for these exempt items is to be agreed upon by contractor and county when ordered. County reserves the right to procure items from other suppliers if contractor cannot meet county business timelines.

3.2 EXPEDITED DELIVERY:

3.2.1 If the Using Agency determines that expedited delivery or other alternate shipping is required, it shall notify the Contractor. The Contractor shall determine any additional costs associated with such delivery terms and communicate that cost to the MCDOT procurement contact. .

3.2.2 The MCDOT procurement contact shall not advise the Contractor to proceed with an expedited shipment until acceptable terms are agreed upon and a purchase order is issued. Upon agreeing to the additional costs, the MCDOT procurement contact shall advise the Contractor to proceed.

3.2.3 Upon receipt of material(s) and invoicing, the Using Agency shall ensure that any additional charges are in compliance with and do not exceed agreed to costs. The Using Agency shall retain all documents related to these costs within the agency purchase file.

3.3 SHIPPING DOCUMENTS:

A packing list or other suitable shipping document shall accompany each shipment and shall include the following:

3.3.1 Contract Serial number.

3.3.2 Contractor's name and address.

3.3.3 Using Agency name and address.

3.3.4 Using Agency purchase order number.

3.3.5 A description of product(s) shipped, including item number(s), quantity (ies), number of containers and package number(s), as applicable.

3.4 SAMPLES:

The Contractor may be requested to furnish samples of material(s) bid for examination by the County. Any materials so requested shall be furnished within TEN (10) working days from the ate of request and furnished at no cost to the County and sent to the address designated in the requesting correspondence.

3.5 TESTING:

Unless otherwise specified, materials purchased will be inspected by the Using Agency to ensure the materials meet the quality and quantity requirements of the Specifications. When deemed necessary by the County, samples of the materials may be taken at random from stock received for submission to a commercial laboratory or other appropriate agency for analysis and tests as to whether the materials conform in all respects to the Specifications. In cases where commercial laboratory reports determine that the materials do not meet the Specifications, the expense of such analysis shall be borne by the Contractor.

3.6 ACCEPTANCE:

Upon delivery and any successful installation, the material(s) shall be deemed accepted and the warranty period shall begin. All documentation shall be completed prior to final acceptance.

3.7 WARRANTY:

3.7.1 All items furnished under this Contract shall conform to the requirements of this Contract and shall be free from defects in design, materials and workmanship.

3.7.2 The warranty period for workmanship and materials shall refer to the technical requirements. .

3.7.2.1 The Contractor shall indicate on the Price Sheet the duration of the warranty and any applicable limitations or conditions which may apply.

3.7.2.2 The Contractor agrees that he will, at his own expense, provide all labor and parts required to remove, repair or replace, and reinstall any such defective workmanship and/or materials which becomes or is found to be defective during the term of this warranty. The Contractor shall guarantee the equipment to be supplied complies with all applicable regulations.

3.8 BRAND NAME:

The County reserves the right to request samples to determine quality and acceptability of materials bid by Contractor. In some cases, brand names have been listed in order to define the desired quality and are not intended to be restrictive or to limit competition. Materials substantially equivalent to those designated shall qualify for consideration.

3.9 ORDER CUTOFF INFORMATION:

Contractors submitting bids shall advise the County of all known order cutoff dates for the equipment / product(s) specified in this solicitation at the time of bid submission. Notification of any subsequent cutoff date(s) (learned after submission of bid) shall also be the Contractor's responsibility. The Contractor shall advise the County of subsequent cutoff dates by notifying the Procurement Officer, in writing, of the new information.

3.10 USAGE REPORT:

The Contractor shall furnish the County a usage report upon request delineating the acquisition activity governed by the Contract. The format of the report shall be approved by the County and shall disclose the quantity and dollar value of each contract item by individual unit.

3.11 INVOICES AND PAYMENTS:

3.11.1 The Contractor shall submit one (1) legible copy of their detailed invoice before payment(s) can be made. Incomplete invoices will not be processed. At a minimum, the invoice must provide the following information:

- Company name, address and contact
- County bill-to name and contact information
- Contract Serial Number or
- County purchase order number
- Invoice number and date
- Payment terms
- Date of service or delivery
- Quantity (number of days or weeks)
- Contract Item number(s)
- Description of Purchase (product or services)
- Pricing per unit of purchase
- Freight (if applicable)
- Extended price
- Mileage w/rate (if applicable)
- Arrival and completion time (if applicable)
- Total Amount Due

3.11.2 Problems regarding billing or invoicing shall be directed to the using agency as listed on the Purchase Order.

3.11.3 Payment shall be made to the Contractor by Accounts Payable through the Maricopa County Vendor Express Payment Program. This is an Electronic Funds Transfer (EFT) process. After Contract Award the Contractor shall complete the Vendor Registration Form located on the County Department of Finance Vendor Registration Web Site (http://www.maricopa.gov/Finance/Vendors.aspx).

3.11.4 Discounts offered in the contract shall be calculated based on the date a properly completed invoice is received by the County (ROI).

3.11.5 EFT payments to the routing and account numbers designated by the Contractor will include the details on the specific invoices that the payment covers. The Contractor is required to discuss remittance delivery capabilities with their designated financial institution for access to those details.

3.12 APPLICABLE TAXES:

3.12.1 **Payment of Taxes:** The Contractor shall pay all applicable taxes. With respect to any installation labor on items that are not attached to real property performed by Contractor under the terms of this Contract, the installation labor cost and the gross receipts for materials provided shall be listed separately on the Contractor's invoices.

3.12.2 **State and Local Transaction Privilege Taxes:** Maricopa County is subject to all applicable state and local transaction privilege taxes. To the extent any state and local transaction privilege taxes apply to sales made under the terms of this contract it is the responsibility of the seller to collect and remit all applicable taxes to the proper taxing jurisdiction of authority.

3.12.3 **Tax Indemnification:** Contractor and all subcontractors shall pay all Federal, state, and local taxes applicable to its operation and any persons employed by the Contractor. Contractor shall, and require all subcontractors to hold Maricopa County harmless from any responsibility for taxes, damages and interest, if applicable, contributions required under Federal, and/or state and local laws and regulations and any other costs including transaction privilege taxes, unemployment compensation insurance, Social Security and Worker's Compensation.

3.13 POST AWARD MEETING:

The Contractor may be required to attend a post-award meeting with the Using Agency to discuss the terms and conditions of this Contract. This meeting will be coordinated by the Procurement Officer of the Contract.

3.14 STRATEGIC ALLIANCE for VOLUME EXPENDITURES ($AVE)

The County is a member of the $AVE cooperative purchasing group. $AVE includes the State of Arizona, many Phoenix metropolitan area municipalities, and many K-12 unified school districts. Under the $AVE Cooperative Purchasing Agreement, and with the concurrence of the successful Respondent under this solicitation, a member of $AVE may access a contract resulting from a solicitation issued by the County. If you **do not** want to grant such access to a member of $AVE, **please so state** in your proposal. In the absence of a statement to the contrary, the County will assume that you do wish to grant access to any contract that may result from this Request for Proposal.

3.15 INTERGOVERNMENTAL COOPERATIVE PURCHASING AGREEMENTS (ICPA's)

County currently holds ICPA's with numerous governmental entities throughout the State of Arizona. These agreements allow those entities, with the approval of the Contractor, to purchase their requirements under the terms and conditions of the County Contract. Please indicate on Attachment A, your acceptance or rejection regarding such participation of other governmental entities. Your response will not be considered as an evaluation factor in awarding a contract.

4.0 CONTRACTUAL TERMS & CONDITIONS:

4.1 CONTRACT TERM:

This Invitation for Bid is for awarding a firm, fixed-price purchasing contract to cover a term of one (1) year.

4.2 OPTION TO RENEW:

The County may, at its option and with the concurrence of the Contractor, renew the term of this Contract up to a maximum of four (4) additional years, (or at the County's sole discretion, extend the contract on a month to month basis for a maximum of six (6) months after expiration). The Contractor shall be notified in writing by the Office of Procurement Services of the County's intention to renew the contract term at least sixty (60) calendar days prior to the expiration of the original contract term.

4.3 PRICE ADJUSTMENTS:

Any requests for reasonable price adjustments must be submitted sixty (60) days prior to the Contract expiration. Requests for adjustment in cost of labor and/or materials must be supported by appropriate documentation. If County agrees to the adjusted price terms, County shall issue written approval of the change. The reasonableness of the request will be determined by comparing the request with the Consumer Price Index or by performing a market survey.

4.4 INDEMNIFICATION:

To the fullest extent permitted by law, and to the extent that claims, damages, losses or expenses are not covered and paid by insurance purchased by the Contractor, the Contractor shall defend indemnify and hold harmless the County (as Owner), its agents, representatives, agents, officers, directors, officials, and employees from and against all claims, damages, losses, and expenses (including, but not limited to attorneys' fees, court costs, expert witness fees, and the costs and attorneys' fees for appellate proceedings) arising out of, or alleged to have resulted from the negligent acts, errors, omissions, or mistakes relating to the performance of this Contract.

Contractor's duty to defend, indemnify, and hold harmless the County, its agents, representatives, agents, officers, directors, officials, and employees shall arise in connection with any claim, damage, loss, or expense that is attributable to bodily injury, sickness, disease, death or injury to, impairment of, or destruction of tangible property, including loss of use resulting there from, caused by negligent acts, errors, omissions, or mistakes in the performance of this Contract, but only to the extent caused by the negligent acts or omissions of the Contractor, a subcontractor, any one directly or indirectly employed by them, or anyone for whose acts they may be liable, regardless of whether or not such claim, damage, loss, or expense is caused in part by a party indemnified hereunder.

The amount and type of insurance coverage requirements set forth herein will in no way be construed as limiting the scope of the indemnity in this paragraph.

The scope of this indemnification does not extend to the sole negligence of County.

4.5 INSURANCE

4.5.1 Contractor, at Contractor's own expense, shall purchase and maintain the herein stipulated minimum insurance from a company or companies duly licensed by the State of Arizona and possessing a current A.M. Best, Inc. rating of B++. In lieu of State of Arizona licensing, the stipulated insurance may be purchased from a company or companies, which are authorized to do business in the State of Arizona, provided that said insurance companies meet the approval of County. The form of any insurance policies and forms must be acceptable to County.

4.5.2 All insurance required herein shall be maintained in full force and effect until all work or service required to be performed under the terms of the Contract is satisfactorily completed and formally accepted. Failure to do so may, at the sole discretion of County, constitute a material breach of this Contract.

4.5.3 Contractor's insurance shall be primary insurance as respects County, and any insurance or self-insurance maintained by County shall not contribute to it.

4.5.4 Any failure to comply with the claim reporting provisions of the insurance policies or any breach of an insurance policy warranty shall not affect the County's right to coverage afforded under the insurance policies.

4.5.5 The insurance policies may provide coverage that contains deductibles or self-insured retentions. Such deductible and/or self-insured retentions shall not be applicable with respect to the coverage provided to County under such policies. Contractor shall be solely responsible for the deductible and/or self-insured retention and County, at its option, may require Contractor to secure payment of such deductibles or self-insured retentions by a surety bond or an irrevocable and unconditional letter of credit.

4.5.6 The insurance policies required by this Contract, except Workers' Compensation and Errors and Omissions, shall name County, its agents, representatives, officers, directors, officials and employees as Additional Insureds.

4.5.7 The policies required hereunder, except Workers' Compensation and Errors and Omissions, shall contain a waiver of transfer of rights of recovery (subrogation) against County, its agents, representatives, officers, directors, officials and employees for any claims arising out of Contractor's work or service.

4.5.8 **Commercial General Liability.**

Commercial General Liability insurance and, if necessary, Commercial Umbrella insurance with a limit of not less than $1,000,000 for each occurrence, $2,000,000 Products/Completed Operations Aggregate, and $2,000,000 General Aggregate Limit. The policy shall include coverage for premises liability, bodily injury, broad form property damage, personal injury, products and completed operations and blanket contractual coverage, and shall not contain any provisions which would serve to limit third party action over claims. There shall be no endorsement or modifications of the CGL limiting the scope of coverage for liability arising from explosion, collapse, or underground property damage.

4.5.9 **Automobile Liability.**

Commercial/Business Automobile Liability insurance and, if necessary, Commercial Umbrella insurance with a combined single limit for bodily injury and property damage of not less than $500,000 each occurrence with respect to any of the Contractor's owned, hired, and non-owned vehicles assigned to or used in performance of the Contractor's work or services or use or maintenance of the Premises under this Contract.

4.5.10 **Workers' Compensation.**

Workers' Compensation insurance to cover obligations imposed by federal and state statutes having jurisdiction of Contractor's employees engaged in the performance of the work or services under this Contract; and Employer's Liability insurance of not less than $500,000 for each accident, $500,000 disease for each employee, and $500,000 disease policy limit.

Contractor, its contractors and its subcontractors waive all rights against Contract and its agents, officers, directors and employees for recovery of damages to the extent these

damages are covered by the Workers' Compensation and Employer's Liability or commercial umbrella liability insurance obtained by Contractor, its contractors and its subcontractors pursuant to this Contract.

4.5.11 **Errors and Omissions (Professional Liability) Insurance.**

Errors and Omissions (Professional Liability) insurance and, if necessary, Commercial Umbrella insurance, which will insure and provide coverage for errors or omissions or professional liability of the **CONTRACTOR**, with limits of no less than $1,000,000 for each claim.

4.6 ORDERING AUTHORITY.

4.6.1 Any request for purchase of product(s) shall be accompanied by a valid purchase order, issued by Office of Procurement Services, a Purchase Order issued by the using Department or direction by a Certified Agency Procurement Aid (CAPA) with a Purchase Card for payment.

4.7 REQUIREMENTS CONTRACT:

4.7.1 Contractors signify their understanding and agreement by signing a bid submittal, that the Contract resulting from the bid is a requirements contract. However, the Contract does not guarantee any minimum or maximum number of purchases will be made. It only indicates that if purchases are made for the materials contained in the Contract, they will be purchased from the Contractor awarded that item. Orders will only be placed when the County identifies a need and proper authorization and documentation have been approved.

4.7.2 County reserves the right to cancel Purchase Orders within a reasonable period of time after issuance. Should a Purchase Order be canceled, the County agrees to reimburse the Contractor for actual and documentable costs incurred by the Contractor in response to the Purchase Order. The County will not reimburse the Contractor for any costs incurred after receipt of County notice of cancellation, or for lost profits, shipment of product prior to issuance of Purchase Order, etc.

4.7.3 Contractors agree to accept verbal notification of cancellation of Purchase Orders from the County Procurement Officer with written notification to follow. By submitting a bid in response to this Invitation for Bids, the Contractor specifically acknowledges to be bound by this cancellation policy.

4.8 UNCONDITIONAL TERMINATION FOR CONVENIENCE:

Maricopa County may terminate the resultant Contract for convenience by providing sixty (60) calendar days advance notice to the Contractor.

4.9 TERMINATION FOR DEFAULT:

The County may, by written notice of default to the Contractor, terminate this contract in whole or in part if the Contractor fails to:

4.9.1 Deliver the supplies or to perform the services within the time specified in this contract or any extension;

4.9.2 Make progress, so as to endanger performance of this contract; or

4.9.3 Perform any of the other provisions of this contract.

4.9.4 The County's right to terminate this contract under these subparagraph may be exercised if the Contractor does not cure such failure within 10 days (or more if authorized in

writing by the County) after receipt of the notice from the Procurement Officer specifying the failure.

4.10 STATUTORY RIGHT OF CANCELLATION FOR CONFLICT OF INTEREST:

Notice is given that pursuant to A.R.S. § 38-511 the County may cancel any Contract without penalty or further obligation within three years after execution of the contract, if any person significantly involved in initiating, negotiating, securing, drafting or creating the contract on behalf of the County is at any time while the Contract or any extension of the Contract is in effect, an employee or agent of any other party to the Contract in any capacity or consultant to any other party of the Contract with respect to the subject matter of the Contract. Additionally, pursuant to A.R.S § 38-511 the County may recoup any fee or commission paid or due to any person significantly involved in initiating, negotiating, securing, drafting or creating the contract on behalf of the County from any other party to the contract arising as the result of the Contract.

4.11 OFFSET FOR DAMAGES;

In addition to all other remedies at Law or Equity, the County may offset from any money due to the Contractor any amounts Contractor owes to the County for damages resulting from breach or deficiencies in performance of the contract.

4.12 ADDITIONS/DELETIONS OF SERVICE:

4.12.1 The County reserves the right to add and/or delete materials to a Contract. If a service requirement is deleted, payment to the Contractor will be reduced proportionately, to the amount of service reduced in accordance with the bid price. If additional materials are required from a Contract, prices for such additions will be negotiated between the Contractor and the County.

4.13 SUBCONTRACTING:

4.13.1 The Contractor may not assign to another Contractor or Subcontract to another party for performance of the terms and conditions hereof without the written consent of the County. All correspondence authorizing subcontracting must reference the Bid Serial Number and identify the job project.

4.13.2 The Subcontractor's rate for the job shall not exceed that of the Prime Contractor's rate, as bid in the pricing section, unless the Prime Contractor is willing to absorb any higher rates. The Subcontractor's invoice shall be invoiced directly to the Prime Contractor, who in turn shall pass-through the costs to the County, without mark-up. A copy of the Subcontractor's invoice must accompany the Prime Contractor's invoice.

4.14 AMENDMENTS:

All amendments to this Contract shall be in writing and approved/signed by both parties. Maricopa County Office of Procurement Services shall be responsible for approving all amendments for Maricopa County.

4.15 ACCESS TO AND RETENTION OF RECORDS FOR THE PURPOSE OF AUDIT AND/OR OTHER REVIEW:

4.15.1 In accordance with section MCI 371 of the Maricopa County Procurement Code the Contractor agrees to retain all books, records, accounts, statements, reports, files, and other records and back-up documentation relevant to this Contract for six (6) years after final payment or until after the resolution of any audit questions which could be more than six (6) years, whichever is latest. The County, Federal or State auditors and any other persons duly authorized by the Department shall have full access to, and the right to examine, copy and make use of, any and all said materials.

4.15.2 If the Contractor's books, records , accounts, statements, reports, files, and other records and back-up documentation relevant to this Contract are not sufficient to support and document that requested services were provided, the Contractor shall reimburse Maricopa County for the services not so adequately supported and documented.

4.15.3 If at any time it is determined by the County that a cost for which payment has been made is a disallowed cost, the County shall notify the Contractor in writing of the disallowance. The course of action to address the disallowance shall be at sole discretion of the County, and may include either an adjustment to future invoices, request for credit, request for a check or deduction from current billings Submitted by the Contractor by the amount of the disallowance, or to require reimbursement forthwith of the disallowed amount by the Contractor by issuing a check payable to Maricopa County.

4.16 VALIDITY:

The invalidity, in whole or in part, of any provision of this Contract shall not void or affect the validity of any other provision of the Contract.

4.17 RIGHTS IN DATA:

The County shall have the use of data and reports resulting from a Contract without additional cost or other restriction except as may be established by law or applicable regulation. Each party shall supply to the other party, upon request, any available information that is relevant to a Contract and to the performance thereunder.

4.18 RELATIONSHIPS:

In the performance of the services described herein, the Contractor shall act solely as an independent contractor, and nothing herein or implied herein shall at any time be construed as to create the relationship of employer and employee, co-employee, partnership, principal and agent, or joint venture between the County and the Contractor.

4.19 NON-DISCRIMINATION:

CONTRACTOR agrees to comply with all provisions and requirements of Arizona Executive Order 2009-09 including flow down of all provisions and requirements to any subcontractors. Executive Order 2009-09 supersedes Executive order 99-4 and amends Executive order 75-5 and may be viewed and downloaded at the Governor of the State of Arizona's website http://azmemory.azlibrary.gov/cdm/singleitem/collection/execorders/id/680/rec/1 which is hereby incorporated into this contract as if set forth in full herein. During the performance of this contract, CONTRACTOR shall not discriminate against any employee, client or any other individual in any way because of that person"s age, race, creed, color, religion, sex, disability or national origin.

4.20 CERTIFICATION REGARDING DEBARMENT AND SUSPENSION

4.20.1 The undersigned (authorized official signing for the Contractor) certifies to the best of his or her knowledge and belief, that the Contractor

4.20.1.1 is not presently debarred, suspended, proposed for debarment, declared ineligible, or voluntarily excluded from covered transactions by any Federal Department or agency;

4.20.1.2 have not within 3-year period preceding this Contract been convicted of or had a civil judgment rendered against them for commission of fraud or a criminal offense in connection with obtaining, attempting to obtain, or performing a public (Federal, State or local) transaction or contract under a public transaction; violation of Federal or State antitrust statues or commission of embezzlement, theft, forgery, bribery, falsification or destruction of records, making false statements, or receiving stolen property;

4.20.1.3 are not presently indicted or otherwise criminally or civilly charged by a government entity (Federal, State or local) with commission of any of the offenses enumerated in paragraph (2) of this certification; and

4.20.1.4 have not within a 3-year period preceding this Contract had one or more public transaction (Federal, State or local) terminated for cause of default.

4.20.2 The Contractor agrees to include, without modification, this clause in all lower tier covered transactions (i.e. transactions with subcontractors) and in all solicitations for lower tier covered transactions related to this Contract.

4.21 VERIFICATION REGARDING COMPLIANCE WITH ARIZONA REVISED STATUTES §41-4401 AND FEDERAL IMMIGRATION LAWS AND REGULATIONS:

4.21.1 By entering into the Contract, the Contractor warrants compliance with the Immigration and Nationality Act (INA using e-verify) and all other federal immigration laws and regulations related to the immigration status of its employees and A.R.S. §23-214(A). The contractor shall obtain statements from its subcontractors certifying compliance and shall furnish the statements to the Procurement Officer upon request. These warranties shall remain in effect through the term of the Contract. The Contractor and its subcontractors shall also maintain Employment Eligibility Verification forms (I-9) as required by the Immigration Reform and Control Act of 1986, as amended from time to time, for all employees performing work under the Contract and verify employee compliance using the E-verify system and shall keep a record of the verification for the duration of the employee's employment or at least three years, whichever is longer. I-9 forms are available for download at USCIS.GOV.

4.21.2 The County retains the legal right to inspect contractor and subcontractor employee documents performing work under this Contract to verify compliance with paragraph 4.21 of this Section. Contractor and subcontractor shall be given reasonable notice of the County's intent to inspect and shall make the documents available at the time and date specified. Should the County suspect or find that the Contractor or any of its subcontractors are not in compliance, the County will consider this a material breach of the contract and may pursue any and all remedies allowed by law, including, but not limited to: suspension of work, termination of the Contract for default, and suspension and/or debarment of the Contractor. All costs necessary to verify compliance are the responsibility of the Contractor.

4.22 CONTRACTOR LICENSE REQUIREMENT:

4.22.1 The Respondent shall procure all permits, insurance, licenses and pay the charges and fees necessary and incidental to the lawful conduct of his/her business, and as necessary complete any required certification requirements, required by any and all governmental or non-governmental entities as mandated to maintain compliance with and in good standing for all permits and/or licenses. The Respondent shall keep fully informed of existing and future trade or industry requirements, Federal, State and Local laws, ordinances, and regulations which in any manner affect the fulfillment of a Contract and shall comply with the same. Contractor shall immediately notify both Office of Procurement Services and the using agency of any and all changes concerning permits, insurance or licenses.

4.22.2 Respondents furnishing finished products, materials or articles of merchandise that will require installation or attachment as part of the Contract, shall possess any licenses required. A Respondent is not relieved of its obligation to posses the required licenses by subcontracting of the labor portion of the Contract. Respondents are advised to contact the Arizona Registrar of Contractors, Chief of Licensing, at (602) 542-1525 to ascertain licensing requirements for a particular contract. Respondents shall identify which license(s), if any, the Registrar of Contractors requires for performance of the Contract.

4.23 INFLUENCE

As prescribed in MC1-1202 of the Maricopa County Procurement Code, any effort to influence an employee or agent to breach the Maricopa County Ethical Code of Conduct or any ethical conduct, may be grounds for Disbarment or Suspension under MC1-902.
An attempt to influence includes, but is not limited to:

4.23.1 A Person offering or providing a gratuity, gift, tip, present, donation, money, entertainment or educational passes or tickets, or any type valuable contribution or subsidy,

4.23.2 That is offered or given with the intent to influence a decision, obtain a contract, garner favorable treatment, or gain favorable consideration of any kind.

If a Person attempts to influence any employee or agent of Maricopa County, the Chief Procurement Officer, or his designee, reserves the right to seek any remedy provided by the Maricopa County Procurement Code, any remedy in equity or in the law, or any remedy provided by this contract.

4.24 PUBLIC RECORDS:

All Offers submitted and opened are public records and must be retained by the Records Manager at the Office of Procurement Services. Offers shall be open to public inspection after Contract award and execution, except for such Offers deemed to be confidential by the Office of Procurement Services. If an Offeror believes that information in its Offer should remain confidential, it shall indicate as confidential, the specific information in its offer and submit a statement with its offer detailing the reasons that the information should not be disclosed. Such reasons shall include the specific harm or prejudice which may arise. The Records Manager of the Office of Procurement Services shall determine whether the identified information is confidential pursuant to the Maricopa County Procurement Code and the Arizona Public Records Law.

5.0 INSTRUCTIONS TO RESPONDENTS: (Please note that this Section does not become part of any resultant contract.)

Bidders and Proposers are solely responsible for submitting bids, proposals, and any modifications or withdrawals, to be received at the time and designated location required by the solicitation (ITN, RFP, ROQ, or any other solicitation notice).

Any bid, proposal, modification, or withdrawal received after the designated time is "late" and will rejected and not be evaluated per Paragraph MC1-320 of the Maricopa County Procurement

5.1 INQUIRIES AND NOTICES:

All inquiries concerning information herein shall be addressed to:

Maricopa County
Office of Procurement Services
ATTN: Contract Administration
320 West Lincoln Street
Phoenix, Arizona 85003

OR:

BidSync.com under the "Questions and Answers" link.

Administrative telephone inquiries shall be addressed to:

Nicola Perrera, Procurement Officer, 602/506-3274

(perreran@mail.maricopa.gov)

Inquiries may be submitted by telephone but must be followed up in writing. **No oral communication is binding on Maricopa County.**

5.2 EVALUATION CRITERIA.

The evaluation of bids shall be based on, but will not be limited to, the following:

5.2.1 Compliance with specifications.

5.2.2 Price.

5.2.3 Determination of responsibility.

The County reserves the right to award in whole or in part, by item or group of items, by section or geographic area, or make multiple awards, where such action serves the County's best interest.

5.3 SUBMISSION PRICE CLARITY.

For reasons of clarity all submissions of pricing shall be priced in the same unit (size, volume, quantity, weight, etc.) as the bid specifications request. Submissions (bids) failing to comply with this requirement may be declared non-responsive.

5.4 INSTRUCTIONS FOR PREPARING AND SUBMITTING BIDS.

Responses shall be submitted electronically to BidSync.com prior to the bid closing.

5.4.1 Attachments C shall be submitted via webform available at BidSync.com

5.4.1.1 Attachment A (PRICING)

5.4.1.2 Attachment B (AGREEMENT PAGE)

5.4.1.3 Attachment C (REFERENCES) - Webform

5.4.1.4 Other documents as required

5.4.2 Bids must be signed by an owner, partner or corporate official who has been authorized to make such commitments. All prices shall be held firm for a period of one hundred fifty (150) days after the bid closing date.

5.5 **BY SIGNING ATTACHMENT B AND SUBMITTING A BID THE RESPONDENT CERTIFIES THAT RESPONDENT UNDERSTANDS THAT THIS DOCUMENT SECTIONS 1.0, 2.0, 3.0 AND 4.0 BECOMES THE CONTRACT AND THERE IS NO CONTRACT UNTIL THE MARICOPA COUNTY BOARD OF SUPERVISORS OR THEIR DELEGATE HAS APPROVED THE CONTRACT.**

NOTE 1: RESPONDENTS ARE STRONGLY ENCOURAGED TO REVIEW MARICOPA COUNTY'S PROCUREMENT ADMINISTRATIVE INFORMATION PRIOR TO SUBMITTING A BID. FOR THIS INFORMATION, GO TO: http://www.maricopa.gov/procurement/

ATTACHMENT A

PRICING

SEE EXCEL FILE 16136-Attachment A Pricing

Respondents to follow instructions listed in Excel sheet. Submit any questions to Procurement Officer.

ATTACHMENT B

AGREEMENT PAGE

Respondent hereby certifies that Respondent has read, understands and agrees that acceptance by Maricopa County of the Respondent's Offer will create a binding Contract. Respondent agrees to fully comply with all terms and conditions as set forth in the Maricopa County Procurement Code, and amendments thereto, together with the specifications and other documentary forms herewith made a part of this specific procurement

BY SIGNING THIS PAGE THE SUBMITTING RESPONDENT CERTIFIES THAT RESPONDENT HAS REVIEWED THE ADMINISTRATIVE INFORMATION AND STANDARD CONTRACT'S TERMS AND CONDITIONS LOCATED AT http://www.maricopa.gov/procurement AND AGREE TO BE CONTRACTUALLY BOUND TO THEM.

_____ Small Business Enterprise (SBE)

RESPONDENT (FIRM) SUBMITTING PROPOSAL

FEDERAL TAX ID NUMBER

DUNS #

PRINTED NAME AND TITLE

AUTHORIZED SIGNATURE

ADDRESS

TELEPHONE

FAX #

CITY STATE ZIP

DATE

WEB SITE: _____

EMAIL ADDRESS: _____

MARICOPA COUNTY, ARIZONA

BY: _____
CHIEF PROCUREMENT OFFICER,
OFFICE OF PROCUREMENT SERVICES

DATE

APPROVED AS TO FORM:

DEPUTY COUNTY ATTORNEY

DATE

ATTACHMENT C

REFERENCES

SEE BIDSYNC.COM WEBFORM "ATTACHMENT C"

EXHIBIT 1

VENDOR REGISTRATION PROCEDURES

BidSync.com Registration is FREE and REQUIRED for all vendors.

Register On-line at https://www.bidsync.com

Select Free Registration. Upon completion of your on-line registration, you are responsible for updating any changes to your information. Please retain your Login ID and Password for future use.

For assistance, please contact BidSync Vendor Support Department via phone or email, during regular business hours: 1-800-990-9339 or agencysupport@BidSync.com

~~EXHIBIT 2~~

~~SIGN DETAILS~~

~~See BidSync Attachment "Sign Details"~~

EXHIBIT 3

SAMPLE INSURANCE CERTIFICATE

CERTIFICATE OF LIABILITY INSURANCE

DATE (MM/DD/YYYY)

THIS CERTIFICATE IS ISSUED AS A MATTER OF INFORMATION ONLY AND CONFERS NO RIGHTS UPON THE CERTIFICATE HOLDER. THIS CERTIFICATE DOES NOT AFFIRMATIVELY OR NEGATIVELY AMEND, EXTEND OR ALTER THE COVERAGE AFFORDED BY THE POLICIES BELOW. THIS CERTIFICATE OF INSURANCE DOES NOT CONSTITUTE A CONTRACT BETWEEN THE ISSUING INSURER(S), AUTHORIZED REPRESENTATIVE OR PRODUCER, AND THE CERTIFICATE HOLDER.

IMPORTANT: If the certificate holder is an ADDITIONAL INSURED, the policy(ies) must be endorsed. If SUBROGATION IS WAIVED, subject to the terms and conditions of the policy, certain policies may require an endorsement. A statement on this certificate does not confer rights to the certificate holder in lieu of such endorsement(s).

PRODUCER	CONTACT NAME:	
	PHONE (A/C, No, Ext):	FAX (A/C, No):
	E-MAIL ADDRESS:	
	INSURER(S) AFFORDING COVERAGE	NAIC #
	INSURER A :	
INSURED	INSURER B :	
	INSURER C :	
	INSURER D :	
	INSURER E :	
	INSURER F :	

COVERAGES CERTIFICATE NUMBER: REVISION NUMBER:

THIS IS TO CERTIFY THAT THE POLICIES OF INSURANCE LISTED BELOW HAVE BEEN ISSUED TO THE INSURED NAMED ABOVE FOR THE POLICY PERIOD INDICATED. NOTWITHSTANDING ANY REQUIREMENT, TERM OR CONDITION OF ANY CONTRACT OR OTHER DOCUMENT WITH RESPECT TO WHICH THIS CERTIFICATE MAY BE ISSUED OR MAY PERTAIN, THE INSURANCE AFFORDED BY THE POLICIES DESCRIBED HEREIN IS SUBJECT TO ALL THE TERMS, EXCLUSIONS AND CONDITIONS OF SUCH POLICIES. LIMITS SHOWN MAY HAVE BEEN REDUCED BY PAID CLAIMS.

INSR LTR	TYPE OF INSURANCE	ADDL INSD	SUBR WVD	POLICY NUMBER	POLICY EFF (MM/DD/YYYY)	POLICY EXP (MM/DD/YYYY)	LIMITS	
	COMMERCIAL GENERAL LIABILITY						EACH OCCURRENCE	$
	CLAIMS-MADE / OCCUR						DAMAGE TO RENTED PREMISES (Ea occurrence)	$
							MED EXP (Any one person)	$
							PERSONAL & ADV INJURY	$
	GEN'L AGGREGATE LIMIT APPLIES PER:						GENERAL AGGREGATE	$
	POLICY / PRO-JECT / LOC						PRODUCTS - COMP/OP AGG	$
	OTHER:							$
	AUTOMOBILE LIABILITY						COMBINED SINGLE LIMIT (Ea accident)	$
	ANY AUTO						BODILY INJURY (Per person)	$
	ALL OWNED AUTOS / SCHEDULED AUTOS						BODILY INJURY (Per accident)	$
	HIRED AUTOS / NON-OWNED AUTOS						PROPERTY DAMAGE (Per accident)	$
								$
	UMBRELLA LIAB / OCCUR						EACH OCCURRENCE	$
	EXCESS LIAB / CLAIMS-MADE						AGGREGATE	$
	DED / RETENTION $							$
	WORKERS COMPENSATION AND EMPLOYERS' LIABILITY						PER STATUTE / OTH-ER	
	ANY PROPRIETOR/PARTNER/EXECUTIVE OFFICER/MEMBER EXCLUDED? Y / N (Mandatory in NH)	N / A					E.L. EACH ACCIDENT	$
	If yes, describe under DESCRIPTION OF OPERATIONS below						E.L. DISEASE - EA EMPLOYEE	$
							E.L. DISEASE - POLICY LIMIT	$

DESCRIPTION OF OPERATIONS / LOCATIONS / VEHICLES (ACORD 101, Additional Remarks Schedule, may be attached if more space is required)

CERTIFICATE HOLDER	CANCELLATION
	SHOULD ANY OF THE ABOVE DESCRIBED POLICIES BE CANCELLED BEFORE THE EXPIRATION DATE THEREOF, NOTICE WILL BE DELIVERED IN ACCORDANCE WITH THE POLICY PROVISIONS.
	AUTHORIZED REPRESENTATIVE

ATTACHMENT A
PRICING

SERIAL 16136
NIGP CODE:
RESPONDENT'S NAME: _____
COUNTY VENDOR NUMBER : _____
ADDRESS: _____
_____
P.O. ADDRESS: _____
TELEPHONE NUMBER: _____
FACSIMILE NUMBER: _____
WEB SITE: _____
CONTACT (REPRESENTATIVE): _____
REPRESENTATIVE'S E-MAIL ADDRESS: _____

	YES	NO	REBATE
WILL ALLOW OTHER GOVERNMENTAL ENTITIES TO PURCHASE FROM THIS CONTRACT	[ ]	[ ]	
WILL ACCEPT PROCUREMENT CARD FOR PAYMENT:	[ ]	[ ]	
WILL OFFER REBATE (CASH OR CREDIT) FOR UTILIZING PROCUREMENT CARD: (Payment shall be made within 48 hours of utilizing the Purchasing Card)	[ ]	[ ]	_____%

RESPONDENT IS REQUIRED TO PICK ONE OF THE FOLLOWING PAYMENT TERMS.
FAILURE TO INDICATE PAYMENT TERMS WILL RESULT IN A DEFAULT TO NET 30 DAYS.
RESPONDENT MUST INITIAL THEIR SELECTION BELOW.

[ ] NET 10 DAYS	[ ] NET 45 DAYS	[ ] 1% 10 DAYS NET 30 DAYS
[ ] NET 15 DAYS	[ ] NET 60 DAYS	[ ] 2% 30 DAYS NET 31 DAYS
[ ] NET 20 DAYS	[ ] NET 90 DAYS	[ ] 1% 30 DAYS NET 31 DAYS
[ ] NET 30 DAYS	[ ] 2% 10 DAYS NET 30 DAYS	[ ] 5% 30 DAYS NET 31 DAYS

1.0 PRICING:
Respondents shall list the catalog name/catalog sub-category(ies) for each pricing section to be used. If no original manufacturer's catalog exists respondents may list their own normal retail offerings/cost as the reference to apply the percentage discount/markup.

	DISCOUNT/MARKUP/ RATE
1.1 Ready Made Signs	
[Catalog Name/Reference 1]	_____%
[Catalog Name/Reference 2 (if needed)]	_____%
1.2 Standard Blank Metal Signs	
[Catalog Name/Reference 1]	_____%
[Catalog Name/Reference 2 (if needed)]	_____%
1.3 Special Signs	DONE VIA TASK ORDER - See section 2.3.25
1.4 Sheeting	
[Catalog Name/Reference 1]	____%
[Catalog Name/Reference 2 (if needed)]	____%
1.5 Repair, Refurbishment, and Disposal	
Repair/Refurb	$___per sqft
Disposal/Recycle Credit	Respondent to state material index and margin above/below

ATTACHMENT C

RESPONDENT REFERENCES

RESPONDENT SUBMITTING BID:

1. COMPANY NAME:
ADDRESS:
CONTACT PERSON:
TELEPHONE: E-MAIL ADDRESS:

2. COMPANY NAME:
ADDRESS:
CONTACT PERSON:
TELEPHONE: E-MAIL ADDRESS:

3. COMPANY NAME:
ADDRESS:
CONTACT PERSON:
TELEPHONE: E-MAIL ADDRESS:

4. COMPANY NAME:
ADDRESS:
CONTACT PERSON:
TELEPHONE: E-MAIL ADDRESS:

5. COMPANY NAME:
ADDRESS:
CONTACT PERSON:
TELEPHONE: E-MAIL ADDRESS:

BIDSYNC ELECTRONIC SUBMISSION INSTRUCTIONS

When submitting a response (proposal, quote or bid) electronically through BidSync, it is the sole responsibility of the supplier to ensure that the response is received by BidSync prior to the closing date and time. Each of the following steps in BidSync MUST be completed in order to place an offer:

A. Log in to www.bidsync.com;
B. Locate the bid (solicitation) to which you are responding;
   a. Click the "Search" tab on the top left of the page;
   b. Enter keyword or bid (solicitation) number and click "Search";
C. Click on the "Bid title/description" to open the Bid (solicitation) Information Page;
D. "View and Accept" the following documents in the document section;
   Attachment A (VENDOR INFORMATION)- Webform
   Attachment B (AGREEMENT) - Webform
   Attachment C (REFERENCES) - Webform
   Other documents as required
E. Select "Place Offer" found at the bottom of the page;
F. Enter your pricing, notes, other required information and upload attachments to this page;
G. Click "Submit" at the bottom of the page;
H. Review Offer(s); and
I. Enter your password and click "Confirm".

Note that the final step in submitting a response involves the supplier's acknowledgement that the information and documents entered into the BidSync system are accurate and represent the supplier's actual proposal, quote or bid. This acknowledgement is registered in BidSync when the supplier clicks "Confirm". BidSync will post a notice that the offer has been received. This notice from BidSync MUST be recorded prior to the closing date and time or the response will be considered late and will not be accepted. Be aware that entering information and uploading documents into BidSync may take considerable time. Please allow sufficient time to complete the online forms and upload documents. Suppliers should not wait until the last minute to submit a response. It is recommended that suppliers submit responses a minimum of 24 hours prior to the closing deadline. The deadline for submitting information and documents will end at the closing time indicated in the solicitation. All information and documents must be fully entered, uploaded, acknowledged (Confirm) and recorded into BidSync before the closing time or the system will stop the process and the response will be considered late and will not be accepted.

Responses submitted in BidSync are completely secure. No one (including County purchasing staff) can see responses until after the deadline. Suppliers may modify or change their response at any time prior to the closing deadline. However, all modifications or changes must be completed and acknowledged (Confirm) in the BidSync system prior to the deadline. BidSync will post a notice that the modification/change (new offer) has been received. This notice from BidSync MUST be recorded prior to the closing date and time or the response will be considered late and will not be accepted. If you have not been asked to enter your password and click Save to save your response, your offer has not been updated.

Please be aware that typing in your password acts as your electronic signature, which is just as legal and binding as an original signature. (See Electronic Signatures in Global and National Commerce Act for more information.)

The County reserves the right to award in whole or in part, by item or group of items, by section or geographic area, or make multiple awards, where such action serves the County's best interest.

Bids must be signed by an owner, partner or corporate official who has been authorized to make such commitments. All prices shall be held firm for a period of one hundred fifty (150) days after the bid closing date.

NOTICE OF SOLICITATION

SERIAL 14105-C

INVITATION FOR BID FOR: TRAFFIC SIGN POSTS AND ACCESSORIES

Notice is hereby given that Maricopa County is conducting this invitation for bids, electronically through an outside agent, BidSync.com, until **2:00 P.M./M.S.T.** on **NOVEMBER 18TH, 2014** for **SERIAL# 14105-C INVITATION FOR BID FOR TRAFFIC SIGN POSTS AND ACCESSORIES** for Maricopa County.

To participate in this bidding process, vendors shall register through BidSync.com. To register with BidSync, please go to www.BidSync.com and click on the orange 'Register' link. Registration has no cost, and will allow you to access all of the bid information, bid documents, receive bid notifications, and submit a response. **ONLY RESPONSES THAT ARE SUBMITTED THROUGH BIDSYNC.COM WILL BE REVIEWED.**

For assistance, please contact BidSync Vendor Support Department via phone or email, during regular business hours: 1-800-990-9339 or agencysupport@BidSync.com

All responses shall be submitted **electronically** to BidSync.com prior to the bid closing. The bid will be listed under **"14105-C INVITATION FOR BID FOR TRAFFIC SIGN POSTS AND ACCESSORIES."**

The Maricopa County Procurement Code ("The Code") governs this procurement and is incorporated by this reference. Any protest concerning this Invitation for Bid must be filed with the Procurement Officer in accordance with Section MC1-905 of the Code.

ALL ADMINISTRATIVE INFORMATION CONCERNING THIS INVITATION FOR BID CAN BE LOCATED AT http://www.maricopa.gov/procurement/

ANY ADDENDA TO THIS INVITATION FOR BID WILL BE POSTED ON THE MARICOPA COUNTY OFFICE OF PROCUREMENT SERVICES WEB SITE UNDER THE SOLICITATION SERIAL NUMBER. THIS INFORMATION WILL ALSO BE POSTED ONLINE AT .

FAILURE TO REVIEW ANY ADDENDA DOES NOT NEGATE YOUR INITIAL OFFER AND HOLDS THE RESPONDENT RESPONSIBLE FOR ANY CHANGES PRIOR TO BID CLOSING.

DIRECT ALL INQUIRIES TO:

DERRON WASP
PROCUREMENT OFFICER
TELEPHONE: (602) 506-3823
EMAIL: WASPD@MAIL.MARICOPA.GOV

NOTE: MARICOPA COUNTY PUBLISHES ITS SOLICITATIONS ONLINE AND THEY ARE AVAILABLE FOR VIEWING AND/OR DOWNLOADING AT THE FOLLOWING INTERNET ADDRESS:

http://www.maricopa.gov/procurement/solicitation.aspx

TABLE OF CONTENTS

NOTICE OF SOLICITATION

TABLE OF CONTENTS

SECTIONS:

1.0	INTENT
2.0	SPECIFICATIONS
3.0	CONTRACTUAL TERMS & CONDITIONS
4.0	INSTRUCTIONS TO RESPONDENTS (This Section will not remain as part of any Resultant contract)

ATTACHMENTS:

ATTACHMENT A	VENDOR INFORMATION
ATTACHMENT B	AGREEMENT PAGE
ATTACHMENT C	REFERENCES

EXHIBITS:

EXHIBIT 1	VENDOR REGISTRATION PROCEDURES
EXHIBIT 2	MCDOT / TRAFFIC ENGINEERING / SQUARE SLEEVE
EXHIBIT 3	MCDOT / TRAFFIC ENGINEERING / SQUARE ANCHOR
EXHIBIT 4	EXTERNAL CANTILEVER WING BRACKET
EXHIBIT 5	BOX BLADE HARDWARE - SEP WITH HOLE
EXHIBIT 6	BOX BLADE HARDWARE – SEP WITH OUT HOLE
EXHIBIT 7	BOX BLADE POST CAP
EXHIBIT 8	CANTILEVER WING BRACKET EXTENSION

INVITATION FOR BID FOR: TRAFFIC SIGN POSTS AND ACCESSORIES

1.0 INTENT:

The intent of this Invitation for Bids is to establish a price agreement for traffic sign posts. Any material ordered through this contract shall be delivered to the Maricopa County Department of Transportation Procurement and Distribution Center, 2222 S. 27th Ave., Phoenix, Arizona 85009, as covered by a purchase order only.

Other governmental entities under agreement with the County may have access to services provided hereunder (see also Sections 2.22 and 2.23, below).

The County reserves the right to add additional contractors, at the County's sole discretion, in cases where the currently listed contractors are of an insufficient number or skill-set to satisfy the County's needs or to ensure adequate competition on any project or task order work.

2.0 SPECIFICATIONS:

2.1 Material: Tubing with plain finish is roll formed from 12 gauge hot rolled steel, with ASTM A1011/A1011M Grade 50, pickled and oiled galvanized finish, rolled formed from 12 gauge cold rolled steel, galvanized material per ASTM. A653/A653M-93, Grade 50.

2.2 Finished Galvanized: Material (cold rolled steel) is to be finished with hot dipped galvanized coating conforming to ASTM A653/A653M, Grade-90. Zinc Coating shall form a bond with the steel so as not to be affected by subsequent forming operations. Corner weld is to be protected against corrosion by "sacrificial action" when zinc is present on intimate adjacent area. Post must be galvanized both inside and out for the entire length of the post, **no exceptions**.

2.3 Shape: The cross section of the post shall be square tubing formed of 12 gauge steel, carefully formed in size and, if necessary, shall be welded in such a manner that weld or flash shall not interfere with telescoping. Weld flash on corner welded square tubing shall permit a 9/64" radius gauge to be placed in the corner. **Corner weld is the only type of weld acceptable. No** surface weld will be allowed except for anchor and sleeve welded together.

2.4 Perforations: Hole diameter shall be 7/16" plus or minus 1/64"on 1" centers on all four sides the entire length of the post. Holes shall be on the centerline of each side in true alignment and opposite to each other. All material cuts must be centered between hole patterns and at a 90 degree angle to the length of the material. **No punch out or insert type hole patterns shall be considered**.

2.4.1 Yield/Tensile Properties: 60,000 PSI Minimum Yield / 65,000 Minimum Tensile.

2.4.2 Tolerances:

Tolerances on outside sizes:

Outside Tolerance at Nominal Outside Dimensions	all sides at corners
2" x 2"	Plus or minus .008"
2-1/4" x 2-1/4"	Plus or minus .010"

Note: Measurements for outside dimensions shall be made at least 2" from end of tube.

2.4.3 Wall Thickness Tolerance: Permissible variation in wall thickness is plus .011" minus .005".

2.4.4 Convexity and Concavity: Measured in the center of the flat side tolerance is plus or minus .010" applied to the specific size determined at the center.

2.4.5 Squareness of Sides and Twists:

Nominal Outside Dimensions	Twist Permissible Squareness Tolerance	N 3' Length
2" x 2"	Plus or Minus .012"	.062"
2-1/4" x 2-1/4"	Plus or Minus .014	.062"

Note: A sample shall be considered to fail if its sides are not 90 degrees to each other by the tolerance listed above.

2.4.6 Straightness to Tolerance: Permissible variation in straightness is 3/16" per 10'.

2.4.7 Corner Radius: Standard outside corner radius shall be 5/32" (0.15625") plus or minus 1/64" (0.015625").

2.4.8 Length: The length of each post shall be specified and have permissible length tolerance of plus or minus 1/8" (0.125")

2.4.9 Cross Section:

Posts shall be of one or more of the following sizes:

Size	Gauge	Weight per Foot, Pounds
2" X 2"	12	2.416
2-1/4" X 2-1/4"	12	2.773

2.4.10 Quality Assurance: The manufacturer shall certify in writing with the bid that the materials offered have been tested in accordance with a certified quality assurance program and indicate the product's yield strength, PSI and their product's tensile strength, PSI and that the manufacturer has supervised all the elements of the fabrication necessary for the manufacturer of the telescopic perforated square tubing and that all materials have proven to be satisfactory for the use intended by these contract documents. ***This requirement is mandatory.***

2.4.11 Telescoping Properties: The finished post shall be straight and shall have a smooth uniform finish. It shall be possible to telescope all consecutive sizes of square tubes freely and for not less than ten feet of their length without the necessity of matching any particular face to any other face. All holes and ends shall be cut square.

2.5 USAGE REPORT:

The Contractor shall furnish the County a quarterly usage report delineating the acquisition activity governed by the Contract. The format of the report shall be approved by the County and shall disclose the quantity and dollar value of each contract item by individual unit.

2.6 DELIVERY AND INSTALLATION:

2.6.1 Delivery shall be F.O.B. Destination Freight Prepaid within forty-five (45) days of receipt of Using Agency purchase order, to any delivery location within Maricopa County.

2.7 EXPEDITED DELIVERY:

2.7.1 If the Using Agency determines that rush shipping or other alternate shipping is required, it shall notify the Contractor. The Contractor shall determine any additional costs associated with such delivery terms and communicate that cost to the Using Agency.

2.7.2 The Using Agency shall not advise the Contractor to proceed with an expedited shipment until acceptable terms are agreed upon and a purchase order is issued. Upon agreeing to the additional costs, the Using Agency shall advise the Contractor to proceed.

2.7.3 Upon receipt of material(s) and invoicing, the Using Agency shall ensure that any additional charges are in compliance with and do not exceed agreed to costs. The Using Agency shall retain all documents related to these costs within the agency purchase file.

2.8 SHIPPING DOCUMENTS:

A packing list or other suitable shipping document shall accompany each shipment and shall include the following:

2.8.1 Contract Serial number.

2.8.2 Contractor's name and address.

2.8.3 Using Agency name and address.

2.8.4 Using Agency purchase order number.

2.8.5 A description of product(s) shipped, including item number(s), quantity (ies), number of containers and package number(s), as applicable.

2.9 SHIPPING TERMS:

Bid price(s) and terms shall be F.O.B. Destination at:
Phoenix, Arizona 85003

2.10 OPERATING MANUALS:

Upon delivery, Contractor shall provide comprehensive operational manuals, service manuals and schematic diagrams, if required by the Using Agency.

2.11 INSTALLATION:

The Contractor's price shall include delivery and set-up to be in complete operating condition.

2.12 ACCEPTANCE:

Upon delivery and/or successful installation, the material(s) shall be deemed accepted and the warranty period shall begin. All documentation shall be completed prior to final acceptance.

2.13 STOCK:

The Contractor shall be expected to stock locally, sufficient quantities as may be necessary to meet the County's needs.

2.14 WAREHOUSE/DISTRIBUTION CENTER:

The Contractor shall have access to a local warehouse/distribution center(s) within the Phoenix, Arizona metropolitan area capable of providing the material(s) listed herein at the time of bid submission.

2.15 DISCONTINUED MATERIALS:

2.15.1 In the event that a manufacturer discontinues materials, the County may allow the Contractor to provide a substitute for the discontinued item or may cancel the Contract. If the Contractor requests permission to substitute a new material, the Contractor shall provide the following to the County:

2.15.1.1 Documentation from the manufacturer that the material has been discontinued.

2.15.1.2 Documentation that names the replacement material.

2.15.1.3 Documentation that provides clear and convincing evidence that the replacement material meets or exceeds all specifications required by the original solicitation.

2.15.1.4 Documentation that provides clear and convincing evidence that the replacement material will be compatible with all the functions or uses of the discontinued material.

2.15.1.5 Documentation confirming that the price for the replacement is the same as or less than the discontinued material.

2.15.2 Material discontinuance applies only to those materials specifically listed on any resultant contract. This will not apply to catalog items not specifically listed on any resultant contract.

2.16 WARRANTY:

2.16.1 All items furnished under this Contract shall conform to the requirements of this Contract and shall be free from defects in design, materials and workmanship.

2.16.2 The warranty period for workmanship and materials shall be for an initial period of twelve (12) months and commence upon acceptance by County.

2.16.2.1 The Contractor shall indicate on the Price Sheet the duration of the warranty and any applicable limitations or conditions which may apply.

2.16.2.2 The Contractor agrees that he will, at his own expense, provide all labor and parts required to remove, repair or replace, and reinstall any such defective workmanship and/or materials which becomes or is found to be defective during the term of this warranty. The Contractor shall guarantee the equipment to be supplied complies with all applicable regulations.

2.17 BRAND NAME:

The County reserves the right to request samples to determine quality and acceptability of materials bid by Contractor. In some cases, brand names have been listed in order to define the desired quality and are not intended to be restrictive or to limit competition. Materials substantially equivalent to those designated shall qualify for consideration.

2.18 ORDER CUTOFF INFORMATION:

Contractors submitting bids shall advise the County of all known order cutoff dates for the equipment / product(s) specified in this solicitation at the time of bid submission. Notification of any subsequent cutoff date(s) (learned after submission of bid) shall also be the Contractor's responsibility. The Contractor shall advise the County of subsequent cutoff dates by notifying the Procurement Officer, in writing, of the new information.

2.19 INVOICES AND PAYMENTS:

2.19.1 The Contractor shall submit one (1) legible copy of their detailed invoice before payment(s) can be made. At a minimum, the invoice must provide the following information:

- Company name, address and contact
- County bill-to name and contact information
- Contract Serial Number
- County purchase order number
- Invoice number and date
- Payment terms
- Date of service or delivery
- Quantity (number of days or weeks)
- Contract Item number(s)
- Description of Purchase (product or services)
- Pricing per unit of purchase
- Freight (if applicable)
- Extended price
- Mileage w/rate (if applicable)
- Arrival and completion time (if applicable)
- Total Amount Due

2.19.2 Problems regarding billing or invoicing shall be directed to the using agency as listed on the Purchase Order.

2.19.3 Payment shall be made to the Contractor by Accounts Payable through the Maricopa County Vendor Express Payment Program. This is an Electronic Funds Transfer (EFT) process. After Contract Award the Contractor shall complete the Vendor Registration Form located on the County Department of Finance Vendor Registration Web Site (**http://www.maricopa.gov/Finance/Vendors.aspx**).

2.19.4 EFT payments to the routing and account numbers designated by the Contractor will include the details on the specific invoices that the payment covers. The Contractor is required to discuss remittance delivery capabilities with their designated financial institution for access to those details.

2.20 TAX:

Tax shall not be levied against labor. Sales/use tax will be determined by County. Tax will not be used in determining low price.

2.21 FUEL COST PRICE ADJUSTMENT:

2.21.1 This provision provides for limited increased or decreased costs of motor fuels (fuels) used to perform services under this Contract. This provision does not apply to burner fuel (i.e. propane, natural gas, fuel oil, used motor oil). It applies to motor fuel only. Fuel cost adjustments may be either positive or negative. A positive fuel cost adjustment will result in an increase in payments to Contractor while a negative fuel cost adjustment will result in a decrease in payments to Contractor.

2.21.2 This provision is intended to minimize risk to both parties to this Contract due to fuel cost fluctuations that may occur during the term of this Contract. This provision is not designed to estimate actual quantities of fuel used in providing services under this Contract, but to provide a reasonable basis for calculating a fuel cost adjustment based on average conditions.

2.21.3 Application of this provision will come into effect upon Contractor submittal of a fuel cost adjustment request. A request may be submitted only when the increased cost of fuel, established as a percentage of total contract price (base fuel cost) upon award of this Contract, exceeds ten (10%) percent of the base fuel cost. The Contractor may request a fuel surcharge no more than four (4) times annually, during the month(s) of March, June, September and December. The request must be submitted no later than the tenth (10th) of the month. Any surcharge shall be effective the first of the following month after receipt and approval. The date of County approval of a fuel cost adjustment request shall become the base date for any future Contractor adjustment requests.

2.21.4 Contractor shall include, as part of its price bid, the percentage of total contract price fuel represents (e.g., fuel cost equals 10% of Contractor cost) (see also, Attachment A, Vendor Information). This percentage will represent and establish the base fuel cost for this Contract. The base fuel cost shall be established as the due date for submission of proposals for this Contract. All subsequent fuel cost adjustments shall be based upon the date the County approves a Contractor's request for fuel cost adjustment (e.g. fuel cost adjustment approved by County on January 1, 2006, January 1, 2006 becomes base date for any next Contractor request for adjustment).

2.21.5 Fuel Cost Application Requirement. The Contractor must provide documentation including type of motor fuel and fuel invoices with price of the fuel used in providing services under this Contract, from the month bids were due and the month of the cost adjustment request, with any fuel cost adjustment application. The fuel cost adjustment application must be completed with all applicable data, and signed by the Contractor. Any cost adjustment will be calculated by the County by using the bureau of Labor Statistics, Producer Price Index for Gasoline – WPU0571 and #2 Diesel Fuel – WPO57303 (http://data.bls.gov/cgi-bin/surveymost?wp).

2.21.6 The fuel surcharge shall be based on the current quarterly index of the West Coast (PADD5) Diesel (On-Highway)-All Types or Reformulated Areas Gasoline compared to the previous quarterly index period as reported on the Energy Information Administration (EIA) website: http://www.eia.doe.gov/

2.21.7 The computation of the fuel surcharge amount shall be determined as follows:

2.21.7.1 The fuel cost component from Attachment A (vendor information) of the Contract with Maricopa County, multiplied by the percent of change indicated by the EIA report from the previous index period.

2.21.7.2 Upon agreement by the County to the surcharge, the County shall issue written approval of the change prior to any adjusted invoicing submitted for payment.

2.21.7.3 The surcharge shall be added as a separate line item to the invoice.

2.22 STRATEGIC ALLIANCE for VOLUME EXPENDITURES ($AVE)

The County is a member of the $AVE cooperative purchasing group. $AVE includes the State of Arizona, many Phoenix metropolitan area municipalities, and many K-12 unified school districts. Under the $AVE Cooperative Purchasing Agreement, and with the concurrence of the successful Respondent under this solicitation, a member of $AVE may access a contract resulting from a solicitation issued by the County. If you **do not** want to grant such access to a member of $AVE, **please state so** in your proposal. In the absence of a statement to the contrary, the County will assume that you do wish to grant access to any contract that may result from this Request for Proposal.

2.23 INTERGOVERNMENTAL COOPERATIVE PURCHASING AGREEMENTS (ICPA's)

County currently holds ICPA's with numerous governmental entities throughout the State of Arizona. These agreements allow those entities, with the approval of the Contractor, to purchase their requirements under the terms and conditions of the County Contract. Please indicate on Attachment A, your acceptance or rejection regarding such participation of other governmental entities. Your response will not be considered as an evaluation factor in awarding a contract.

3.0 SPECIAL TERMS & CONDITIONS:

3.1 CONTRACT TERM:

This Invitation for Bid is for awarding a firm, fixed-price purchasing contract to cover a term of two (2) years.

3.2 OPTION TO RENEW:

The County may, at its option and with the approval of the Contractor, renew the term of this Contract up to a maximum of four (4) additional years, (or at the County's sole discretion, extend the contract on a month to month basis for a maximum of six (6) months after expiration). The Contractor shall be notified in writing by the Office of Procurement Services of the County's intention to renew the contract term at least thirty (30) calendar days prior to the expiration of the original contract term.

3.3 PRICE ADJUSTMENTS:

Any requests for reasonable price adjustments must be submitted sixty (60) days prior to the Contract annual anniversary date. Requests for adjustment in cost of labor and/or materials must be supported by appropriate documentation. If County agrees to the adjusted price terms, County shall issue written approval of the change. The reasonableness of the request will be determined by comparing the request with the Consumer Price Index or by performing a market survey.

3.4 INDEMNIFICATION:

3.4.1 To the fullest extent permitted by law, Contractor shall defend, indemnify, and hold harmless County, its agents, representatives, officers, directors, officials, and employees from and against all claims, damages, losses and expenses, including, but not limited to, attorney fees, court costs, expert witness fees, and the cost of appellate proceedings, relating to, arising out of, or alleged to have resulted from the negligent acts, errors, omissions, mistakes or malfeasance relating to the performance of this Contract. Contractor's duty to defend, indemnify and hold harmless County, its agents, representatives, officers, directors, officials, and employees shall arise in connection with any claim, damage, loss or expense that is caused by any negligent acts, errors, omissions or mistakes in the performance of this Contract by the Contractor, as well as any person or entity for whose acts, errors, omissions, mistakes or malfeasance Contractor may be legally liable.

3.4.2 The amount and type of insurance coverage requirements set forth herein will in no way be construed as limiting the scope of the indemnity in this paragraph.

3.4.3 The scope of this indemnification does not extend to the sole negligence of County.

3.5 INSURANCE:

3.5.1 Contractor, at Contractor's own expense, shall purchase and maintain the herein stipulated minimum insurance from a company or companies duly licensed by the State of Arizona and possessing a current A.M. Best, Inc. rating of B++. In lieu of State of Arizona licensing, the stipulated insurance may be purchased from a company or companies, which are authorized to do business in the State of Arizona, provided that

said insurance companies meet the approval of County. The form of any insurance policies and forms must be acceptable to County.

3.5.2 All insurance required herein shall be maintained in full force and effect until all work or service required to be performed under the terms of the Contract is satisfactorily completed and formally accepted. Failure to do so may, at the sole discretion of County, constitute a material breach of this Contract.

3.5.3 Contractor's insurance shall be primary insurance as respects County, and any insurance or self-insurance maintained by County shall not contribute to it.

3.5.4 Any failure to comply with the claim reporting provisions of the insurance policies or any breach of an insurance policy warranty shall not affect the County's right to coverage afforded under the insurance policies.

3.5.5 The insurance policies may provide coverage that contains deductibles or self-insured retentions. Such deductible and/or self-insured retentions shall not be applicable with respect to the coverage provided to County under such policies. Contractor shall be solely responsible for the deductible and/or self-insured retention and County, at its option, may require Contractor to secure payment of such deductibles or self-insured retentions by a surety bond or an irrevocable and unconditional letter of credit.

3.5.6 County reserves the right to request and to receive, within 10 working days, certified copies of any or all of the herein required insurance certificates. County shall not be obligated to review policies and/or endorsements or to advise Contractor of any deficiencies in such policies and endorsements, and such receipt shall not relieve Contractor from, or be deemed a waiver of County's right to insist on strict fulfillment of Contractor's obligations under this Contract.

3.5.7 The insurance policies required by this Contract, except Workers' Compensation, and Errors and Omissions, shall name County, its agents, representatives, officers, directors, officials and employees as Additional Insureds.

3.5.8 The policies required hereunder, except Workers' Compensation, and Errors and Omissions, shall contain a waiver of transfer of rights of recovery (subrogation) against County, its agents, representatives, officers, directors, officials and employees for any claims arising out of Contractor's work or service.

3.5.9 Commercial General Liability:

Commercial General Liability insurance and, if necessary, Commercial Umbrella insurance with a limit of not less than $2,000,000 for each occurrence, $2,000,000 Products/Completed Operations Aggregate, and $4,000,000 General Aggregate Limit. The policy shall include coverage for bodily injury, broad form property damage, personal injury, products and completed operations and blanket contractual coverage, and shall not contain any provision which would serve to limit third party action over claims. There shall be no endorsement or modification of the CGL limiting the scope of coverage for liability arising from explosion, collapse, or underground property damage.

3.5.10 Automobile Liability:

Commercial/Business Automobile Liability insurance and, if necessary, Commercial Umbrella insurance with a combined single limit for bodily injury and property damage of not less than $2,000,000 each occurrence with respect to any of the Contractor's owned, hired, and non-owned vehicles assigned to or used in performance of the Contractor's work or services under this Contract.

3.5.11 Workers' Compensation:

3.5.11.1 Workers' Compensation insurance to cover obligations imposed by federal and state statutes having jurisdiction of Contractor's employees engaged in the performance of the work or services under this Contract; and Employer's Liability insurance of not less than $1,000,000 for each accident, $1,000,000 disease for each employee, and $1,000,000 disease policy limit.

3.5.11.2 Contractor waives all rights against County and its agents, officers, directors and employees for recovery of damages to the extent these damages are covered by the Workers' Compensation and Employer's Liability or commercial umbrella liability insurance obtained by Contractor pursuant to this Contract.

3.5.12 Errors and Omissions Insurance:

Errors and Omissions insurance and, if necessary, Commercial Umbrella insurance, which will insure and provide coverage for errors or omissions of the Contractor, with limits of no less than $1,000,000 for each claim.

3.5.13 Certificates of Insurance.

3.5.13.1 Prior to commencing work or services under this Contract, Contractor shall have insurance in effect as required by the Contract in the form provided by the County, issued by Contractor's insurer(s), as evidence that policies providing the required coverage, conditions and limits required by this Contract are in full force and effect. Such certificates shall be made available to the County upon ten (10) business days. **BY SIGNING THE AGREEMENT PAGE THE CONTRACTOR AGREES TO THIS REQUIREMENT AND FAILURE TO MEET THIS REQUIREMENT WILL RESULT IN CANCELLATION OF CONTRACT.**

3.5.13.2 In the event any insurance policy (ies) required by this contract is (are) written on a "claims made" basis, coverage shall extend for two years past completion and acceptance of Contractor's work or services and as evidenced by annual Certificates of Insurance.

3.5.13.3 If a policy does expire during the life of the Contract, a renewal certificate must be sent to County fifteen (15) days prior to the expiration date.

3.5.14 Cancellation and Expiration Notice.

Insurance required herein shall not be permitted to expire, be canceled, or materially changed without thirty (30) days prior written notice to the County.

3.6 PROCUREMENT CARD ORDERING CAPABILITY:

County may determine to use a procurement card that may be used from time-to-time, to place and make payment for orders under this Contract. Contractors without this capability may be considered non-responsive and not eligible for award consideration.

3.7 INTERNET ORDERING CAPABILITY:

It is the intent of County to use the Internet to communicate and to place orders under this Contract. Contractors without this capability may be considered non-responsive and not eligible for award consideration.

3.8 ORDERING AUTHORITY.

3.8.1 The Contractor should understand that any request for purchase of product(s) shall be accompanied by a valid purchase order, issued by Office of Procurement Services, or by a Certified Agency Procurement Aid (CAPA).

3.8.2 County departments, cities, other counties, schools and special districts, universities, nonprofit educational and public health institutions may also purchase from under this Contract at their discretion and/or other state and local agencies (Customers) may procure the products under this Contract by the issuance of a purchase order to the Respondent. Purchase orders must cite the Contract number.

3.8.3 Contract award is in accordance with the Maricopa County Procurement Code. All requirements for the competitive award of this Contract have been met. A purchase order for the product(s) is the only document necessary for Customers to purchase and for the Contractor to proceed with delivery of product(s) available under this Contract.

3.8.4 Any attempt to represent any product not specifically awarded under this Contract is a violation of the Contract. Any such action is subject to the legal and contractual remedies available to the County, inclusive of, but not limited to, Contract cancellation, suspension and/or debarment of the Contractor.

3.9 REQUIREMENTS CONTRACT:

3.9.1 Contractors signify their understanding and agreement by signing a bid submittal, that the Contract resulting from the bid will be a requirements contract. However, the Contract does not guarantee any minimum or maximum number of purchases will be made. It only indicates that if purchases are made for the materials contained in the Contract, they will be purchased from the Contractor awarded that item. Orders will only be placed when the County identifies a need and proper authorization and documentation have been approved.

3.9.2 County reserves the right to cancel Purchase Orders within a reasonable period of time after issuance. Should a Purchase Order be canceled, the County agrees to reimburse the Contractor but only for actual and documentable costs incurred by the Contractor due to and after issuance of the Purchase Order. The County will not reimburse the Contractor for any costs incurred after receipt of County notice of cancellation, or for lost profits, shipment of product prior to issuance of Purchase Order, etc.

3.9.3 Contractors agree to accept verbal notification of cancellation from the County Procurement Officer with written notification to follow. By submitting a bid in response to this Invitation for Bids, the Contractor specifically acknowledges to be bound by this cancellation policy.

3.10 UNCONDITIONAL TERMINATION FOR CONVENIENCE:

Maricopa County may terminate the resultant Contract for convenience by providing sixty (60) calendar days advance notice to the Contractor.

3.11 TERMINATION FOR DEFAULT:

If the Contractor fails to meet deadlines, or fails to provide the agreed upon service/material altogether, a termination for default will be issued. The termination for default will be issued only after the County deems that the Contractor has failed to remedy the problem after being forewarned.

3.12 TERMINATION BY THE COUNTY:

If the Contractor should be adjudged bankrupt or should make a general assignment for the benefit of its creditors, additionally if a receiver should be appointed on account of its insolvency, the County may terminate the Contract. If the Contractor should persistently or repeatedly refuse or should fail, except in cases for which extension of time is provided, to provide enough properly skilled workers or proper materials, or persistently disregard laws and ordinances, or not proceed with work or otherwise be guilty of a substantial violation of any provision of this Contract, then the County may terminate the Contract. Prior to termination of the Contract, the County shall give the Contractor fifteen- (15) calendar day's written notice. Upon receipt of such termination notice, the Contractor shall be allowed fifteen (15) calendar days to cure such deficiencies.

3.13 STATUTORY RIGHT OF CANCELLATION FOR CONFLICT OF INTEREST:

Notice is given that pursuant to A.R.S. § 38-511 the County may cancel any Contract without penalty or further obligation within three years after execution of the contract, if any person significantly involved in initiating, negotiating, securing, drafting or creating the contract on behalf of the County is at any time while the Contract or any extension of the Contract is in effect, an employee or agent of any other party to the Contract in any capacity or consultant to any other party of the Contract with respect to the subject matter of the Contract. Additionally, pursuant to A.R.S § 38-511 the County may recoup any fee or commission paid or due to any person significantly involved in initiating, negotiating, securing, drafting or creating the contract on behalf of the County from any other party to the contract arising as the result of the Contract.

3.14 OFFSET FOR DAMAGES;

In addition to all other remedies at Law or Equity, the County may offset from any money due to the Contractor any amounts Contractor owes to the County for damages resulting from breach or deficiencies in performance of the contract.

3.15 ADDITIONS/DELETIONS OF SERVICE:

3.15.1 The County reserves the right to add and/or delete materials to a Contract. If a service requirement is deleted, payment to the Contractor will be reduced proportionately, to the amount of service reduced in accordance with the bid price. If additional materials are required from a Contract, prices for such additions will be negotiated between the Contractor and the County.

3.15.2 The County reserves the right of final approval on proposed staff for all Task Orders. Also, upon request by the County, the Contractor will be required to remove any employees working on County projects and substitute personnel based on the discretion of the County within two business days, unless previously approved by the County.

3.16 SUBCONTRACTING:

3.16.1 The Contractor may not assign a Contract or Subcontract to another party for performance of the terms and conditions hereof without the written consent of the County. All correspondence authorizing subcontracting must reference the Bid Serial Number and identify the job project.

3.16.2 The Subcontractor's rate for the job shall not exceed that of the Prime Contractor's rate, as bid in the pricing section, unless the Prime Contractor is willing to absorb any higher rates. The Subcontractor's invoice shall be invoiced directly to the Prime Contractor, who in turn shall pass-through the costs to the County, without mark-up. A copy of the Subcontractor's invoice must accompany the Prime Contractor's invoice.

3.17 AMENDMENTS:

All amendments to this Contract shall be in writing and approved/signed by both parties. Maricopa County Office of Procurement Services shall be responsible for approving all amendments for Maricopa County.

3.18 ACCESS TO AND RETENTION OF RECORDS FOR THE PURPOSE OF AUDIT AND/OR OTHER REVIEW:

3.18.1 In accordance with section MCI 371 of the Maricopa County Procurement Code the Contractor agrees to retain all books, records, accounts, statements, reports, files, and other records and back-up documentation relevant to this Contract for six (6) years after final payment or until after the resolution of any audit questions which could be more than six (6) years, whichever is latest. The County, Federal or State auditors and any other persons duly authorized by the Department shall have full access to, and the right to examine, copy, and make use of, any and all said materials.

3.18.2 If the Contractor's books, records , accounts, statements, reports, files, and other records and back-up documentation relevant to this Contract are not sufficient to support and document that requested services were provided, the Contractor shall reimburse Maricopa County for the services not so adequately supported and documented.

3.18.3 If at any time it is determined by the County that a cost for which payment has been made is a disallowed cost, the County shall notify the Contractor in writing of the disallowance. The course of action to address the disallowance shall be at sole discretion of the County, and may include either an adjustment to future claim submitted by the Contractor by the amount of the disallowance, or to require reimbursement forthwith of the disallowed amount by the Contractor by issuing a check payable to Maricopa County.

3.19 AUDIT DISALLOWANCES:

If at any time it is determined by the County that a cost for which payment has been made is a disallowed cost, the County shall notify the Contractor in writing of the disallowance and the required course of action, which shall be at the option of the County either to adjust any future claim submitted by the Contractor by the amount of the disallowance or to require repayment of the disallowed amount by the Contractor forthwith issuing a check payable to Maricopa County.

3.20 VALIDITY:

The invalidity, in whole or in part, of any provision of the Contract shall not void or affect the validity of any other provision of the Contract.

3.21 RIGHTS IN DATA:

The County shall have the use of data and reports resulting from a Contract without additional cost or other restriction except as may be established by law or applicable regulation. Each party shall supply to the other party, upon request, any available information that is relevant to a Contract and to the performance thereunder.

3.22 RELATIONSHIPS:

In the performance of the services described herein, the Contractor shall act solely as an independent contractor, and nothing herein or implied herein shall at any time be construed as to create the relationship of employer and employee, partnership, principal and agent, or joint venture between the County and the Contractor.

3.23 CERTIFICATION REGARDING DEBARMENT AND SUSPENSION

3.23.1 The undersigned (authorized official signing for the Contractor) certifies to the best of his or her knowledge and belief, that the Contractor, defined as the primary participant in accordance with 45 CFR Part 76, and its principals:

3.23.1.1 are not presently debarred, suspended, proposed for debarment, declared ineligible, or voluntarily excluded from covered transactions by any Federal Department or agency;

3.23.1.2 have not within 3-year period preceding this Contract been convicted of or had a civil judgment rendered against them for commission of fraud or a criminal offense in connection with obtaining, attempting to obtain, or performing a public (Federal, State or local) transaction or contract under a public transaction; violation of Federal or State antitrust statues or commission of embezzlement, theft, forgery, bribery, falsification or destruction of records, making false statements, or receiving stolen property;

3.23.1.3 are not presently indicted or otherwise criminally or civilly charged by a government entity (Federal, State or local) with commission of any of the offenses enumerated in paragraph (2) of this certification; and

3.23.1.4 Have not within a 3-year period preceding this Contract had one or more public transaction (Federal, State or local) terminated for cause of default.

3.23.2 Should the Contractor not be able to provide this certification, an explanation as to why should be attached to the Contact.

3.23.3 The Contractor agrees to include, without modification, this clause in all lower tier covered transactions (i.e. transactions with subcontractors) and in all solicitations for lower tier covered transactions related to this Contract.

3.24 VERIFICATION REGARDING COMPLIANCE WITH ARIZONA REVISED STATUTES §41-4401 AND FEDERAL IMMIGRATION LAWS AND REGULATIONS:

3.24.1 By entering into the Contract, the Contractor warrants compliance with the Immigration and Nationality Act (INA using e-verify) and all other federal immigration laws and regulations related to the immigration status of its employees and A.R.S. §23-214(A). The contractor shall obtain statements from its subcontractors certifying compliance and shall furnish the statements to the Procurement Officer upon request. These warranties shall remain in effect through the term of the Contract. The Contractor and its subcontractors shall also maintain Employment Eligibility Verification forms (I-9) as required by the Immigration Reform and Control Act of 1986, as amended from time to time, for all employees performing work under the Contract and verify employee compliance using the E-verify system and shall keep a record of the verification for the duration of the employee's employment or at least three years, whichever is longer. I-9 forms are available for download at USCIS.GOV.

3.24.2 The County retains the legal right to inspect contractor and subcontractor employee documents performing work under this Contract to verify compliance with paragraph 3.24.1 of this Section. Contractor and subcontractor shall be given reasonable notice of the County's intent to inspect and shall make the documents available at the time and date specified. Should the County suspect or find that the Contractor or any of its subcontractors are not in compliance, the County will consider this a material breach of the contract and may pursue any and all remedies allowed by law, including, but not limited to: suspension of work, termination of the Contract for default, and suspension and/or debarment of the Contractor. All costs necessary to verify compliance are the responsibility of the Contractor.

3.25 CONTRACTOR LICENSE REQUIREMENT:

3.25.1 The Respondent shall procure all permits, insurance, licenses and pay the charges and fees necessary and incidental to the lawful conduct of his/her business, and as necessary complete any required certification requirements, required by any and all governmental or non-governmental entities as mandated to maintain compliance with and in good standing for all permits and/or licenses. The Respondent shall keep fully informed of existing and future trade or industry requirements, Federal, State and Local laws, ordinances, and regulations which in any manner affect the fulfillment of a Contract and shall comply with the same. Contractor shall immediately notify both Office of Procurement Services and the using agency of any and all changes concerning permits, insurance or licenses.

3.25.2 Respondents furnishing finished products, materials or articles of merchandise that will require installation or attachment as part of the Contract, shall possess any licenses required. A Respondent is not relieved of its obligation to posses the required licenses by subcontracting of the labor portion of the Contract. Respondents are advised to contact the Arizona Registrar of Contractors, Chief of Licensing, at (602) 542-1525 to ascertain licensing requirements for a particular contract. Respondents shall identify which license(s), if any, the Registrar of Contractors requires for performance of the Contract.

3.26 INFLUENCE

As prescribed in MC1-1202 of the Maricopa County Procurement Code, any effort to influence an employee or agent to breach the Maricopa County Ethical Code of Conduct or any unethical conduct may be grounds for Disbarment or Suspension under MC1-902.
An attempt to influence includes, but is not limited to:

3.26.1 A Person offering or providing a gratuity, gift, tip, present, donation, money, entertainment or educational passes or tickets, or any type valuable contribution or subsidy,

3.26.2 That is offered or given with the intent to influence a decision, obtain a contract, garner favorable treatment, or gain favorable consideration of any kind.

If a Person attempts to influence any employee or agent of Maricopa County, the Chief Procurement Officer, or his designee, reserves the right to seek any remedy provided by the Maricopa County Procurement Code, any remedy in equity or in the law, or any remedy provided by this contract.

3.27 PUBLIC RECORDS:

All Offers submitted and opened are public records and must be retained by the Records Manager at the Office of Procurement Services. Offers shall be open to public inspection after Contract award and execution, except for such Offers deemed to be confidential by the Office of Procurement Services. If an Offeror believes that information in its Offer should remain confidential, it shall indicate as confidential, the specific information and submit a statement with its offer detailing the reasons that the information should not be disclosed. Such reasons shall include the specific harm or prejudice which may arise. The Records Manager of the Office of Procurement Services shall determine whether the identified information is confidential pursuant to the Maricopa County Procurement Code.

4.0 INSTRUCTIONS TO RESPONDENTS: (Please note that this Section does not become part of any resultant contract.)

4.1 INQUIRIES AND NOTICES:

All inquiries concerning information herein shall be addressed to:

Maricopa County
Office of Procurement Services
ATTN: Contract Administration
320 West Lincoln Street
Phoenix, Arizona 85003

OR:

Please refer to BidSync.com under the "Questions and Answers" link.

Administrative telephone inquiries shall be addressed to:

Derron Wasp, Procurement Officer, 602/506-3823
(waspd@mail.maricopa.gov)

Inquiries may be submitted by telephone but must be followed up in writing. No oral communication is binding on Maricopa County.

4.2 EVALUATION CRITERIA.

4.2.1 The evaluation of bids shall be based on, but will not be limited to, the following:

4.2.1.1 Compliance with specifications.

4.2.1.2 Price.

4.2.1.3 Determination of responsibility.

4.2.2 The County reserves the right to award in whole or in part, by item or group of items, by section or geographic area, or make multiple awards, where such action serves the County's best interest.

4.3 SUBMISSION PRICE CLARITY.

For reasons of clarity all submissions of pricing shall be priced in the same unit (size, volume, quantity, weight, etc.) as the bid specifications request. Submissions (bids) failing to comply with this requirement may be declared non-responsive.

4.4 INSTRUCTIONS FOR PREPARING AND SUBMITTING BIDS.

Responses shall be submitted electronically to BidSync.com prior to the bid closing.

4.4.1 Attachments A, B, and C shall be submitted via webform available at BidSync.com

4.4.1.1 Attachment A (VENDOR INFORMATION)- Webform

4.4.1.2 Attachment B (AGREEMENT) - Webform

4.4.1.3 Attachment C (REFERENCES) - Webform

4.4.1.4 Other documents as required

4.4.2 Bids must be signed by an owner, partner or corporate official who has been authorized to make such commitments. All prices shall be held firm for a period of one hundred fifty (150) days after the bid closing date.

4.5 ADDITIONAL PRICING:

The Contractor is strongly encouraged to offer additional pricing for related items, materials, components which are not specifically addressed as line items in this solicitation. Pricing offered should be noted on the pricing pages of the Contractor's bid in the format requested.

4.6 RESPONDENT REVIEW OF DOCUMENTS.

The Respondent must review its Bid submission to assure the following requirements are met.

4.6.1 **Mandatory:** Bid is submitted as required in Section 4.4 above.

4.6.2 **Mandatory:** Attachment "A", Vendor Information is attached

4.6.3 **Mandatory:** Attachment "B", Agreement is attached; and

4.6.4 **Mandatory:** Attachment "C", References is attached.

4.7 POST AWARD MEETING:

The Contractor may be required to attend a post-award meeting with the Using Agency to discuss the terms and conditions of this Contract. This meeting will be coordinated by the Procurement Officer of the Contract.

NOTE 1: RESPONDENTS ARE STRONGLY ENCOURAGED TO REVIEW MARICOPA COUNTY'S PROCUREMENT ADMINISTRATIVE INFORMATION PRIOR TO SUBMITTING A BID. FOR THIS INFORMATION, GO TO: http://www.maricopa.gov/procurement/

ATTACHMENT A

VENDOR INFORMATION

SEE BIDSYNC.COM WEBFORM "ATTACHMENT A"

ATTACHMENT B

AGREEMENT PAGE

SEE BIDSYNC.COM WEBFORM "ATTACHMENT B"

ATTACHMENT C

REFERENCES

SEE BIDSYNC.COM WEBFORM "ATTACHMENT C"

EXHIBIT 1

VENDOR REGISTRATION PROCEDURES

BidSync.com Registration is FREE and REQUIRED for all vendors.

Register On-line at https://www.bidsync.com

Select Free Registration. Upon completion of your on-line registration, you are responsible for updating any changes to your information. Please retain your Login ID and Password for future use.

For assistance, please contact BidSync Vendor Support Department via phone or email, during regular business hours: 1-800-990-9339 or agencysupport@BidSync.com

EXHIBIT 2

MCDOT / TRAFFIC ENGINEERING / SQUARE SLEEVE

SEE PDF FILE 14105-EXHIBIT 2

EXHIBIT 3

MCDOT / TRAFFIC ENGINEERING / SQUARE ANCHOR

SEE PDF FILE 14105-EXHIBIT 3

EXHIBIT 4

EXTERNAL CANITLEVER WING BRACKET

SEE PDF FILE 14105-EXHIBIT 4

EXHIBIT 5

BOX BLADE HARDWARE – SEP WITH HOLE

SEE PDF FILE 14105-EXHIBIT 5

EXHIBIT 6

BOX BLADE HARDWARE – SEP WITH OUT HOLE

SEE PDF FILE 14105-EXHIBIT 6

EXHIBIT 7

BOX BLADE POST CAP

SEE PDF FILE 14105-EXHIBIT 7

EXHIBIT 8

CANTILEVER WING BRACKET EXTENSION

SEE PDF FILE 14105-EXHIBIT 8

EXHIBIT 2
SQUARE SLEEVE

08103-C

SLEEVE	DIM. 'X'	DIM. 'Y'
'A'	2"	12"
'B'	2 1/4"	12"
'C'	2 1/2"	12"

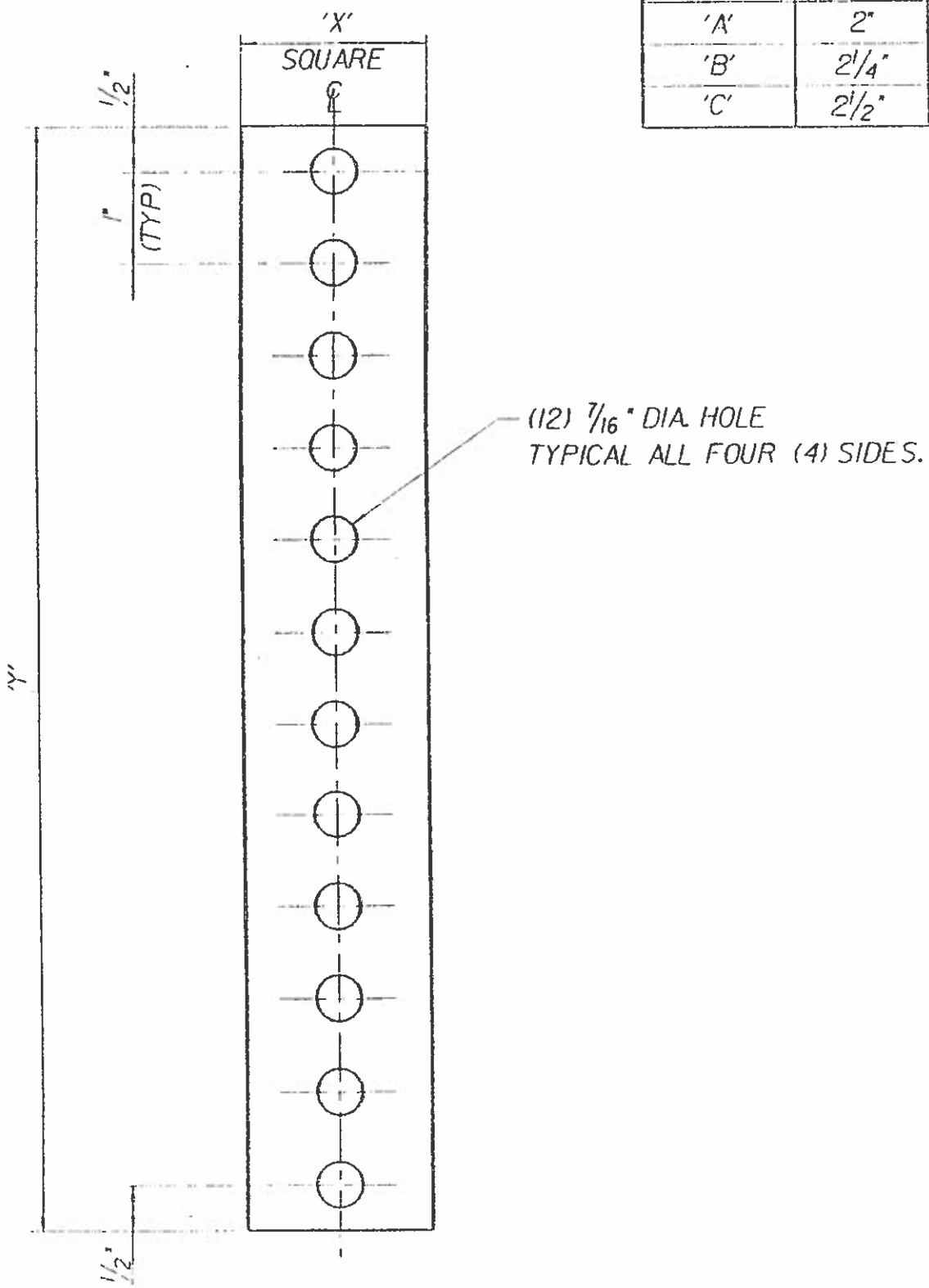

2", 2 1/4" OR 2 1/2" SQUARE SLEEVE

Maricopa County Department Of Transportation / Traffic Engineering	Rev	2

ANCHOR	DIM. 'X'	DIM. 'Y'
'A'	1¾"	18"
'B'	1¾"	24"
'C'	2"	18"
'D'	2"	24"
'E'	2"	30"
'F'	2"	36"

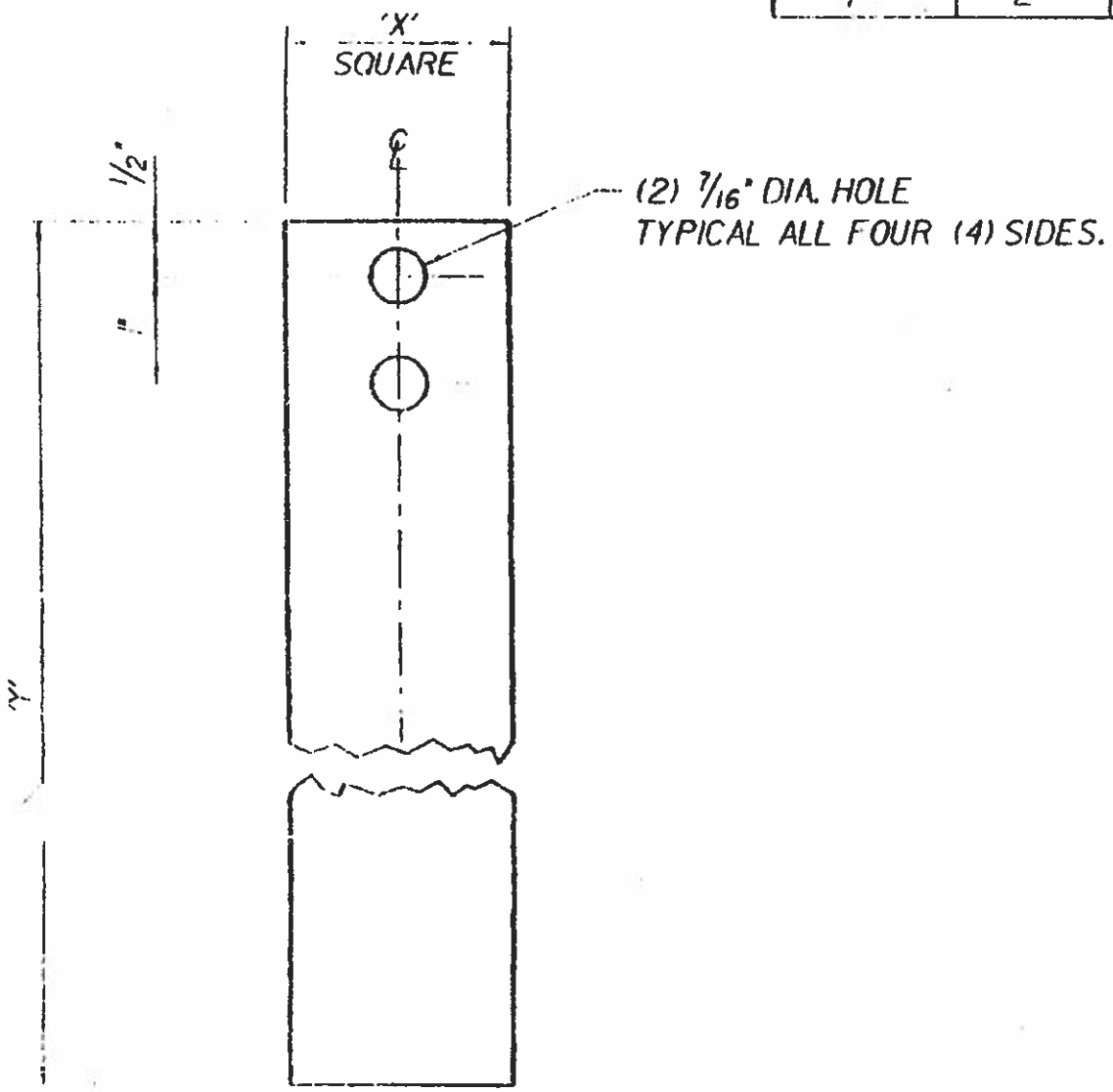

1¾". 2" OR 2¼" SQUARE ANCHOR

EXHIBIT 4
EXTERNAL CANTILEVER WING BRACKET

External Cantilever Wing Bracket
140EWB000

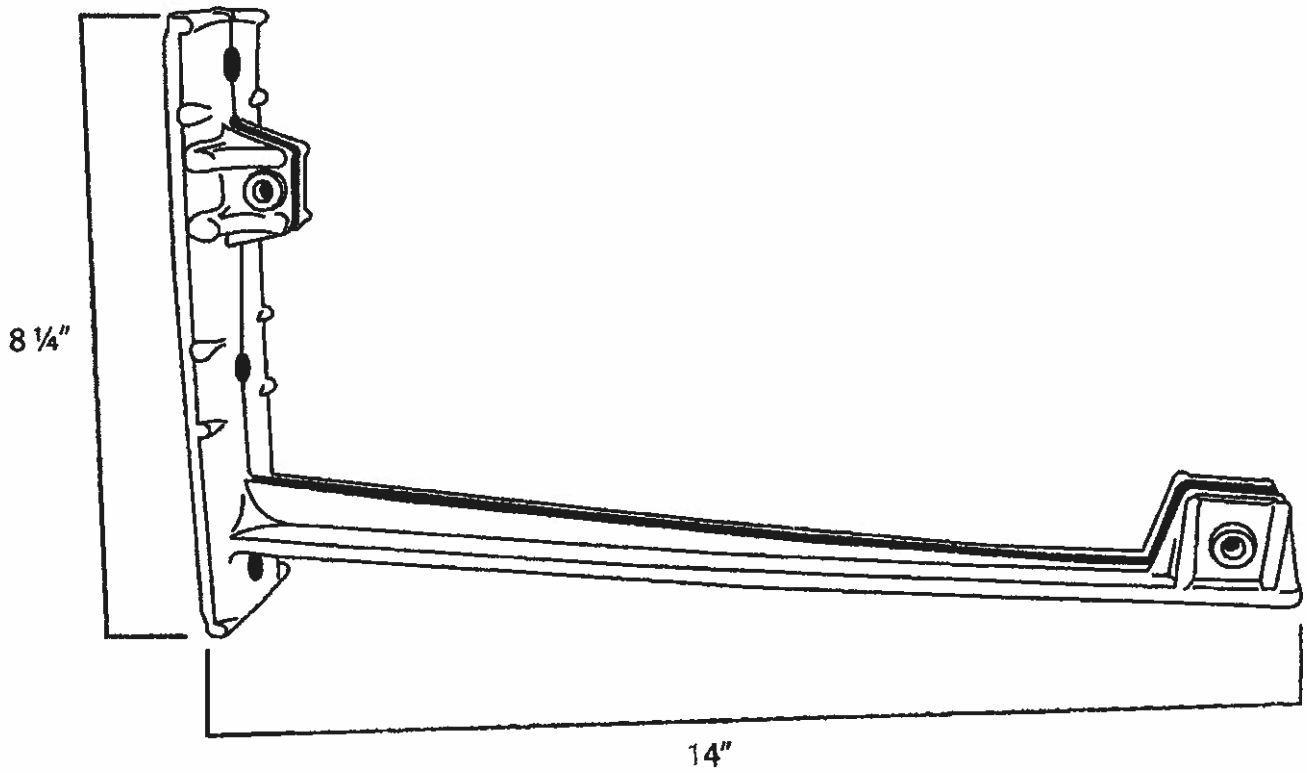

Description	Item Number	Bracket Holder Length	Bracket Type	Units / Box
External Cantilever Wing Bracket • Mount on wall or any post with strapping	**140EWB000**	**14 1/2"**	**Flat/ Extruded**	35

Brackets from high strength Aluminum Alloy 360 under 400 tons pressure and tensile strength 45,000 PSI

EXHIBIT 5
BOX BLADE HARDWARE - SEP WITH HOLE

Box Blade Hardware

Sep w/Hole

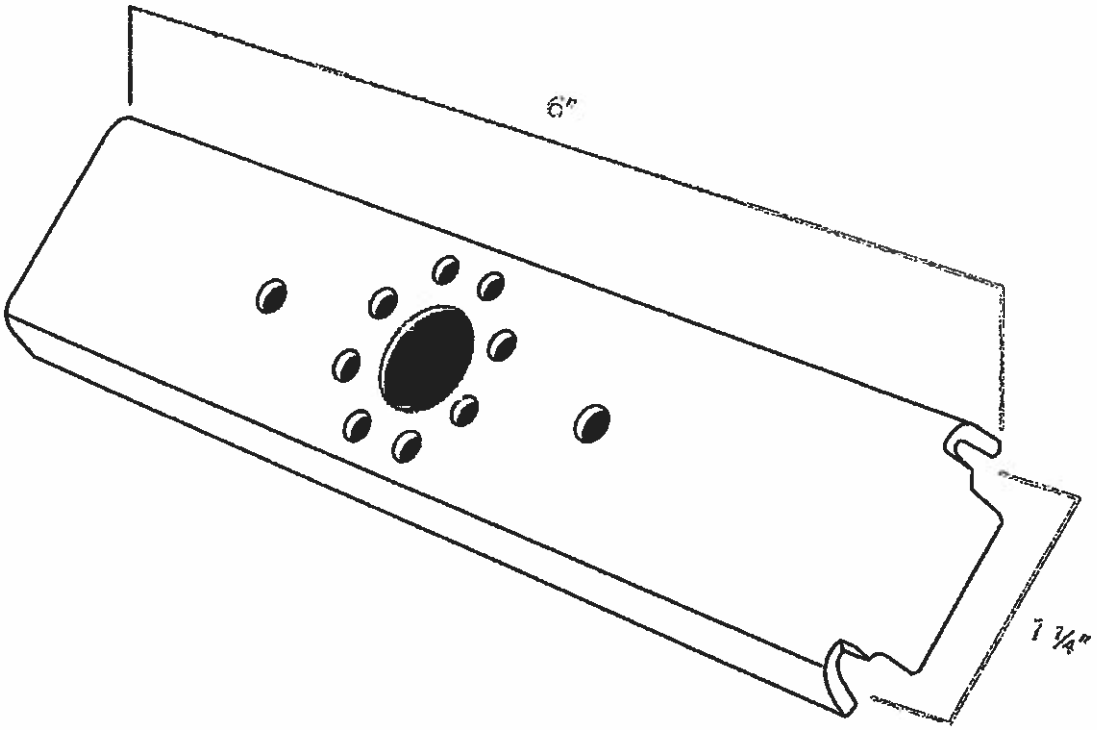

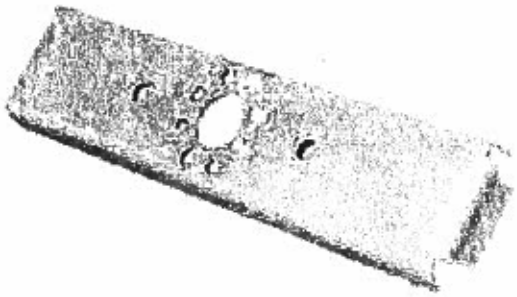

Description	Item Number	Blade Type	Units/ Box
Separator for Box Blade • With Holes	**Sep w/Hole**	**Box Blade**	**100**

EXHIBIT 6
BOX BLADE HARDWARE – SEP WITH OUT HOLE

Box Blade Hardware

Sep w/o Hole

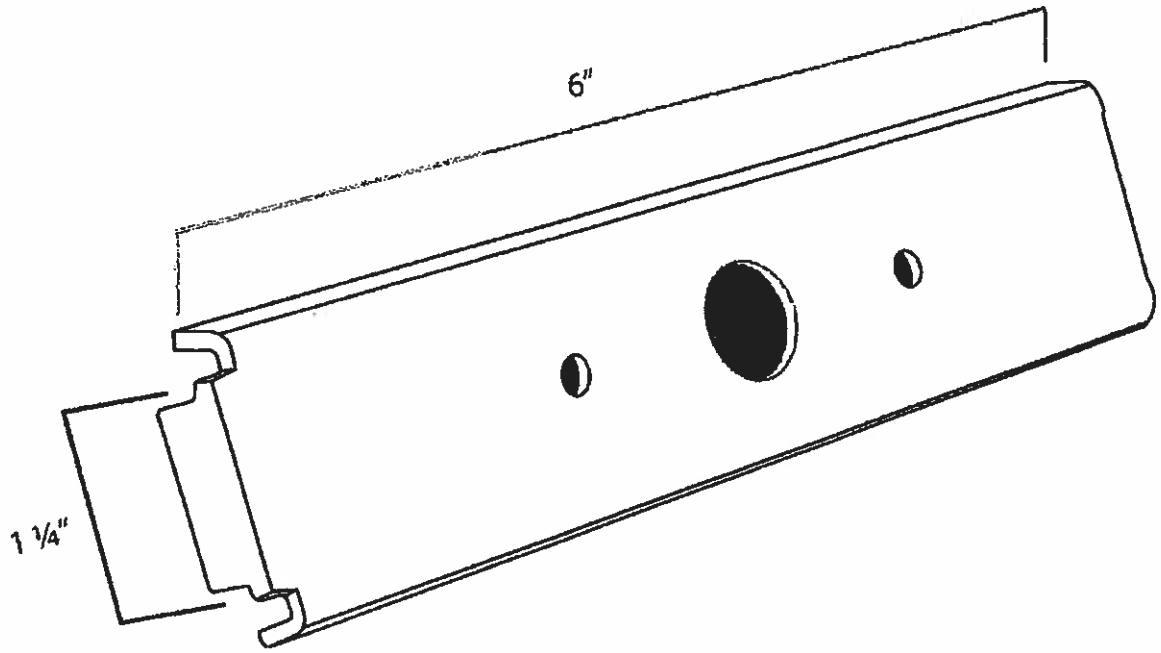

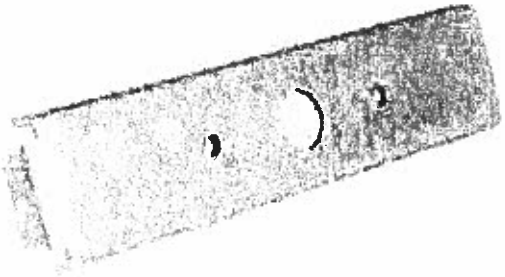

Description	Item Number	Blade Type	Units/ Box
Separator for Box Blade • Without Holes	**Sep w/o Hole**	Box Blade	100

EXHIBIT 7
BOX BLADE POST CAP

Box Blade Post Cap
BBCAP200SQ

Hardware:

A 5/16"-18 x ½" - Set Screw

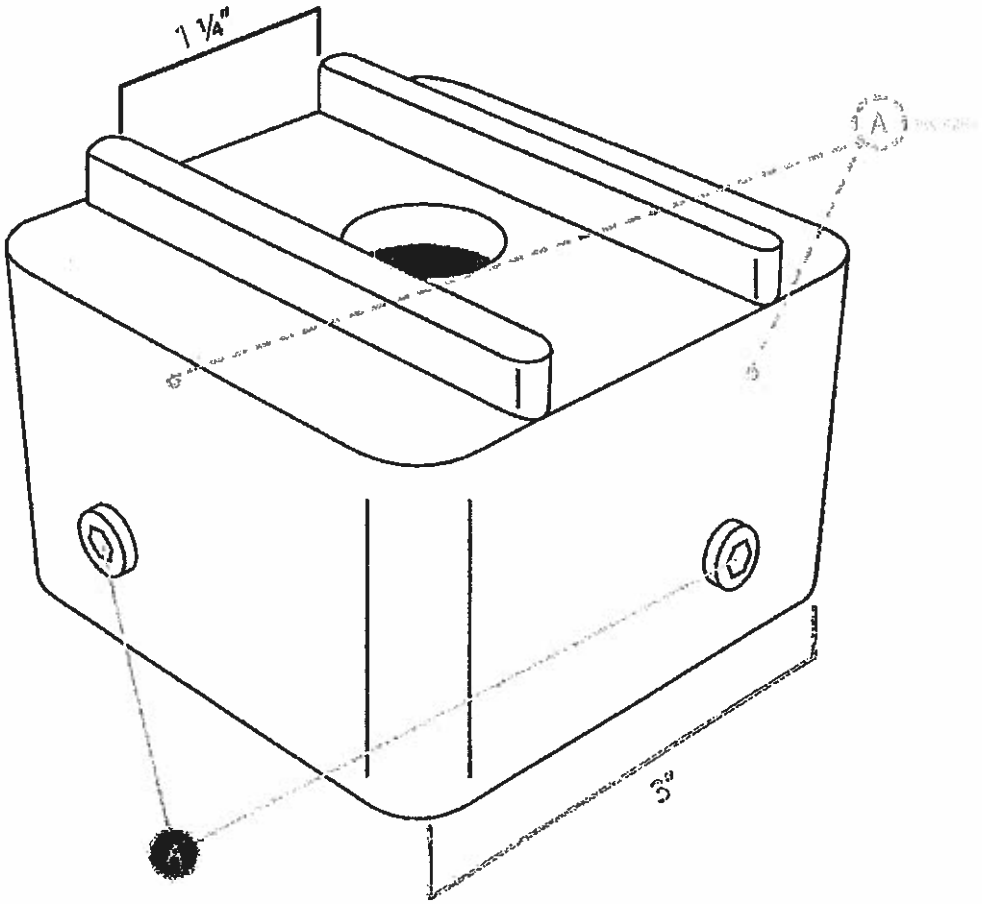

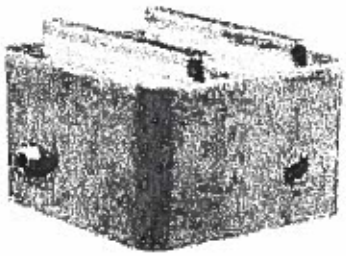

Description	Item Number	Post	Blade Type	Unit Box
Box Blade Cap • For 2" Square Post	**BBCAP200SQ**	Square	Box Blade	50

EXHIBIT 8
CANTILEVER WING BRACKET EXTENSION

Cantilever Wing Bracket Extension
140EWBEXT

Hardware:

A 5/16" - 18 x ½" Srew Set

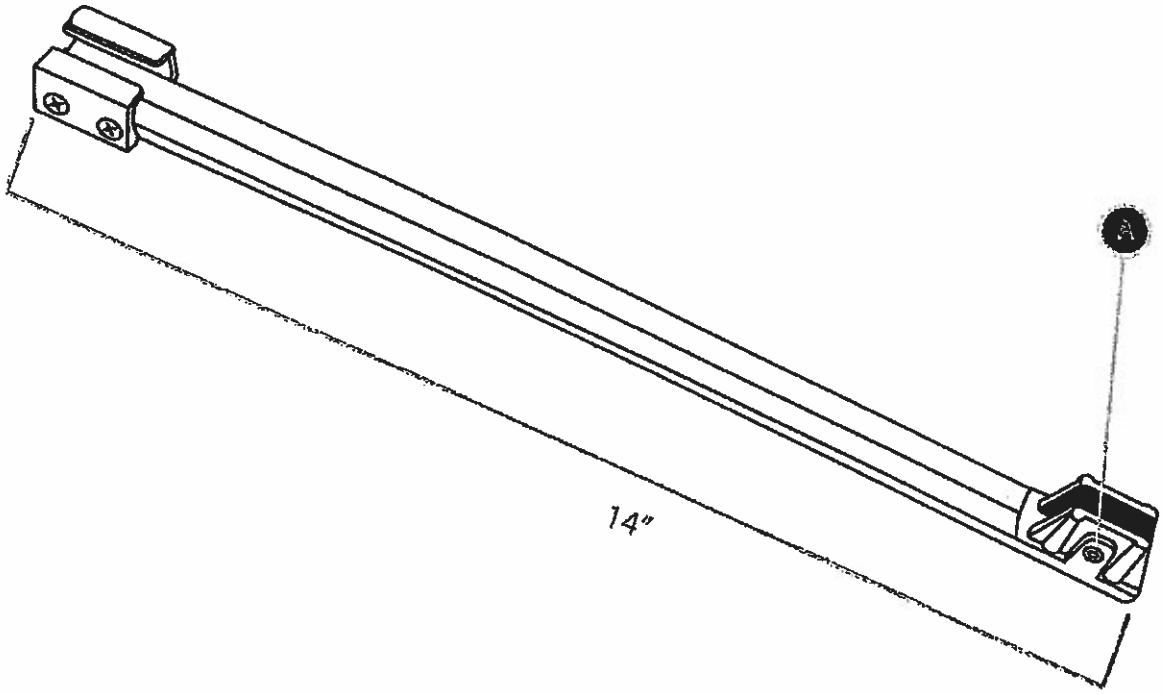

Description	Item Number	Blade Holder Length	Blade Type	Units/ Box
External Cantilever Wing Bracket • Includes 1 - 5/16" set screws • Mount on wall or any post with ¾" strapping	**140EWBEXT**	14 1/2"	Flat/ Extruded	50

VENDOR INFORMATION SHALL MATCH INFORMATION CONTAINED IN BIDSYNC AND MARICOPA COUNTY DEPARTMENT OF FINANCE VENDOR REGISTRATION. PLEASE NOTE THAT VENDORS ARE REQUIRED TO REGISTER VENDOR INFORMATION PRIOR TO AWARD AT THE MARICOPA DEPARTMENT OF FINANCE WEBSITE (http://www.maricopa.gov/Finance/Vendors.aspx)

Attachment A

COMPANY NAME:
DOING BUSINESS AS (DBA) NAME:
MAILING ADDRESS:
REMIT TO ADDRESS:
TELEPHONE NUMBER:
FACSIMILE NUMBER:
WEB SITE:
REPRESENTATIVE NAME:
REPRESENTATIVE TELEPHONE NUMBER:
REPRESENTATIVE E-MAIL:

	YES	NO	REBATE
WILL ALLOW OTHER GOVERNMENTAL ENTITIES TO PURCHASE FROM THIS CONTRACT:	☐	☐	
WILL ACCEPT PROCUREMENT CARD FOR PAYMENT:	☐	☐	

FUEL COMPRISES (if section for fuel price adjustment is located in the solicitation document) % OF TOTAL BID AMOUNT

PAYMENT TERMS: RESPONDENT IS REQUIRED TO PICK ONE OF THE FOLLOWING. PAYMENT TERMS WILL BE CONSIDERED IN DETERMINING LOW BID. FAILURE TO CHOOSE PAYMENT TERMS WILL RESULT IN A DEFAULT TO NET 30 DAYS.

☐ NET 10 DAYS	☐ NET 45 DAYS	☐ 1% 10 DAYS NET 30 DAYS
☐ NET 15 DAYS	☐ NET 60 DAYS	☐ 2% 30 DAYS NET 31 DAYS
☐ NET 20 DAYS	☐ NET 90 DAYS	☐ 1% 30 DAYS NET 31 DAYS
☐ NET 30 DAYS	☐ 2% 10 DAYS NET 30 DAYS	☐ 5% 30 DAYS NET 31 DAYS

ATTACHMENT B

AGREEMENT PAGE

Respondent hereby certifies that Respondent has read, understands and agrees that acceptance by Maricopa County of the Respondent's Bid will create a binding Contract. Respondent further agrees to fully comply with all terms and conditions as set forth in the Maricopa County Procurement Code, and amendments thereto, together with the specifications and other documentary forms herewith made a part of this specific procurement

BY SIGNING THIS PAGE THE SUBMITTING RESPONDENT CERTIFIES THAT RESPONDENT HAS REVIEWED THE ADMINISTRATIVE INFORMATION AND DRAFT IFB CONTRACT'S TERMS AND CONDITIONS LOCATED AT http://www.maricopa.gov/procurement/ AND AGREE TO BE CONTRACTUALLY BOUND TO THEM.

☐ Small Business Enterprise (SBE)

RESPONDENT (FIRM) SUBMITTING PROPOSAL FEDERAL TAX ID NUMBER DUNS #

PRINTED NAME AND TITLE AUTHORIZED SIGNATURE

ADDRESS TELEPHONE/FAX #

CITY STATE ZIP DATE

WEB SITE EMAIL ADDRESS

MARICOPA COUNTY, ARIZONA

CHIEF PROCUREMENT OFFICER, OFFICE OF PROCUREMENT SERVICES DATE

CHAIRMAN, BOARD OF SUPERVISORS DATE

ATTESTED:

CLERK OF THE BOARD DATE

APPROVED AS TO FORM:

LEGAL COUNSEL DATE

ATTACHMENT C

RESPONDENT REFERENCES

RESPONDENT SUBMITTING BID:

1. COMPANY NAME:
ADDRESS:
CONTACT PERSON:
TELEPHONE: E-MAIL ADDRESS:

2. COMPANY NAME:
ADDRESS:
CONTACT PERSON:
TELEPHONE: E-MAIL ADDRESS:

3. COMPANY NAME:
ADDRESS:
CONTACT PERSON:
TELEPHONE: E-MAIL ADDRESS:

4. COMPANY NAME:
ADDRESS:
CONTACT PERSON:
TELEPHONE: E-MAIL ADDRESS:

5. COMPANY NAME:
ADDRESS:
CONTACT PERSON:
TELEPHONE: E-MAIL ADDRESS:

Maricopa County
Office of Procurement Services

www.maricopa.gov

Chief Procurement Officer
320 W. Lincoln St.
Phoenix, AZ 85003
Phone: (602) 506-3967
Fax: (602) 258-1573

September 27, 2018

Zumar Industries, Inc.
7833 N. 106th Avenue
Glendale, AZ 85307

We are pleased to notify you that Maricopa County has renewed your contract to supply the **TRAFFIC SIGNING MATERIALS** as indicated on the attached award sheet with an effective date of **October 01, 2018.**

In accordance with the bid specifications, purchasing documents will be forwarded to you covering the specific items of this award, which will include deliveries and terms.

If you have any questions regarding **Serial 16136-C,** please contact **Brain Garcia** at **(602) 506-3246.**

Sincerely,

Brian Garcia, Procurement Officer
Office of Procurement Services

BG/yy
Attachments

cc: Office of Procurement Services
re: Serial 16136-C

SERIAL 16136-C TRAFFIC SIGNING MATERIALS

DATE OF LAST REVISION: September 27, 2018 CONTRACT END DATE: September 30, 2019

CONTRACT PERIOD THROUGH SEPTEMBER 30, ~~2017 2018~~ 2019

TO: All Departments

FROM: Office of Procurement Services

SUBJECT: Contract for **TRAFFIC SIGNING MATERIALS**

Attached to this letter is published an effective purchasing contract for products and/or services to be supplied to Maricopa County activities as awarded by Maricopa County on **September 15, 2016.**

All purchases of products and/or services listed on the attached pages of this letter are to be obtained from the vendor holding the contract. Individuals are responsible to the vendor for purchases made outside of contracts. The contract period is indicated above.

Kevin Tyne

Kevin Tyne, Chief Procurement Officer
Office of Procurement Services

BG/yy
Attach

Copy to: Office of Procurement Services
Martie Harrell, MCDOT

(Please remove Serial 10026-C from your contract notebooks)

ZUMAR INDUSTRIES, INC., 7833 N. 106TH AVENUE, GLENDALE, AZ 85307

SERIAL 16136
NIGP CODE:

RESPONDENT'S NAME:	**Zumar Industries, Inc.**
COUNTY VENDOR NUMBER :	**VC0000009440**
ADDRESS:	**7833 N. 106TH Avenue, Glendale, AZ 85307**
P.O. ADDRESS:	
TELEPHONE NUMBER:	**623-931-7446**
FACSIMILE NUMBER:	**623-877-7446**
WEB SITE:	**www.zumar.com**
CONTACT (REPRESENTATIVE):	**Jody Case**
REPRESENTATIVE'S E-MAIL ADDRESS:	**jody@zumar.com**

	YES	NO	REBATE
WILL ALLOW OTHER GOVERNMENTAL ENTITIES TO PURCHASE FROM THIS CONTRACT	[X]	[ ]	
WILL ACCEPT PROCUREMENT CARD FOR PAYMENT:	[X]	[ ]	
WILL OFFER REBATE (CASH OR CREDIT) FOR UTILIZING PROCUREMENT CARD:	[ ]	[X]	%

(Payment shall be made within 48 hours of utilizing the Purchasing Card)

PAYMENT TERMS:
[X] 2% 10 Days Net 30 Days

1.0 PRICING:

	DISCOUNT/MARKUP/RATE	
1.1 Ready Made Signs		
Zumar 2016 mcdot ready made signs	20%	Discount off catalog price
1.2 Standard Blank Metal Signs		
Zumar 2016 mcdot bare blanks	20%	Discount off catalog price
1.3 Special Signs	DONE VIA TASK ORDER - See section 2.3.25	
1.4 Sheeting		
3m 2016 pricing catalogue	10%	Discount off catalog price

SERIAL 16136-C

ZUMAR INDUSTRIES, INC.

PRICING SHEET: NIGP CODE 80109

Terms:	2% 10 Days Net 30 Days
Vendor Number:	VC0000009440
Certificates of Insurance	Required
Contract Period:	To cover the period ending **September 30, ~~2017 2018~~ 2019.**

TRAFFIC SIGNING MATERIALS

1.0 INTENT:

The intent of this bid is to award a requirements contract for TRAFFIC SIGNING MATERIALS for the Maricopa County Department of Transportation. Also included are blanket discounts for related supplies as covered by current pricing documents. Amendments, supplements and/or revisions will be effective upon receipt and approval of notice to the Office of Procurement Services. Deliveries are to be made to the Maricopa County Department of Transportation Procurement-Distribution Center, 2222 South 27th Avenue, Phoenix, AZ 85009, as covered by purchase order.

Other governmental entities under agreement with the County may have access to services provided hereunder (see also Sections 3.14 and 3.15, below).

The County reserves the right to add additional contractors, at the County's sole discretion, in cases where the currently listed contractors are of an insufficient number or skill-set to satisfy the County's needs or to ensure adequate competition on any project or task order work.

2.0 SPECIFICATIONS:

2.1 ALUMINUM TRAFFIC SIGN BLANKS:

Each blank shall be degreased, etched, alodine coated in accordance with MIL-C-5541B or current spec, packaged for protection from dust and moisture and ready for application of either paint or reflective sheeting. Each blank shall be made of 5052-H38 or current spec, or better Alloy, governed by A.S.T.M. specification B-209-73 or latest revisions. Each blank shall be furnished with standard 3/8 inch hole locations and corner radii, unless otherwise noted, as shown on Maricopa County Department of Transportation, Standard Details 2061-1 through 2061-21.

2.2 REFLECTIVE SHEETING:

Reflective Sheeting used in the fabrication of traffic control signs shall meet the requirements of the FHWA specifications FP-03 and ASTM (D 4956) or current spec modified as noted hereinafter. Sheeting will be classified by type in accordance with Federal Standard Specifications FP-03 and ASTM (D 4956) or current spec and the following:

2.2.1 TYPE IV SHEETING:

Type IV is a high-intensity retroreflective sheeting to meet or exceed 3M high intensity prismatic grade 3930 or current spec, consisting of prismatic lens elements. The sheeting shall have a pre-coated equivalent or pressure sensitive adhesive and shall meet the minimum coefficients as required by ASTM D4956-09 Type IV or current spec.

2.2.2 TYPE VIII SHEETING:

Type VIII sheeting is an unmetallized microprismatic retroreflective element material. Equal to or exceeds 3M fluorescent orange prismatic work zone sheeting3924S diamond grade material. Type VIII sheeting shall meet the minimum coefficients of retroreflection as required by ASTM D4956-09 Type VIII or current spec.

2.2.3 TYPE XI SHEETING:

Type XI sheeting is an unmetallized microprismatic retroreflective element material meets or exceeds 3M DG3 diamond grade sheeting. Type XI sheeting shall meet the minimum coefficients of retroreflection as required by ASTM D4956-09 Type XI or current spec

2.2.4 The retroreflective sheeting (all types) shall comply with the liner removal and adhesive requirements contained in ASTM D 4956-09 sections 6.8 and 6.9.

2.2.5 Miscellaneous Sheeting Items/Reflective & Non-Reflective:

The manufacturer must provide documentation, to the satisfaction of the Engineer, for all sheeting types purchased by Maricopa County. The sheeting proposed must have been used successfully in a substantial traffic sign program under similar climatic conditions for at least three years.

2.2.6 NON-REFLECTIVE VINYL SHEETING AND OVERLAYS:

2.2.6.1 Non-reflective vinyl sheeting in various colors. Durable, dimensionally stable vinyl that is pressure sensitive for commercial and industrial type applications which will withstand severe weather and handling conditions.

2.2.6.2 Electronic cutable acrylic overlay, films, the sheeting manufacturer shall manufacture electronic cutable acrylic films in the standard traffic control colors, which shall be part of sheeting matched components, in non-perforated, transparent and non-reflective film. When used in accordance with the sheeting manufacturer's instructions, shall not be less the warranty term of the sheeting material (all Types).

2.2.6.3 Graffiti film protective overlay. 3M 1160 or current spec or equivalent. The sheeting manufacturer shall also manufacture clear protective overlays which are compatible with the sheeting's & when used in accordance with the sheeting manufacturer's instructions, shall not lessen the warranty term of the sheeting material (all types).

2.2.7 COLOR REQUIREMENTS:

Conformance to color requirements shall be determined spectrophotometrically in accordance with ASTM E 1164, with instruments utilizing either 45/0 or 0/45 illumination/viewing conditions as described for the 2 degree standard observer and CIE illuminant D65 or current spec in accordance with ASTM E 308 or current spec. For either method, material reference standards used to calibrate the test instrument shall be retroreflective reference standards which have been recently calibrated on a spectrophotometer

2.2.8 SPECIFIC INTENSITY PER UNIT AREA (SIA):

For screen-printed transparent colored areas on white sheeting, the SIA values shall not be less than 70% or current spec of the values for the corresponding color in the applicable table.

2.2.9 SHRINKAGE:

Retroreflective sheeting (all types) shall meet the shrinkage requirements of ASTM D4956-09 section 6.6 or current spec.

2.2.10 FLEXIBILITY:

The retroreflective sheeting (all types) shall meet the flexibility requirements of ASTM D4956-09 section 6.7 or current spec.

2.2.11 ACCELERATED OUTDOOR WEATHERING:

The retroreflective sheeting (all types) shall meet the accelerated outdoor weathering and colorfastness requirements of ASTM D4956-09 section 6.4 and 6.5 or current spec.

2.2.12 PERFORMANCE REQUIREMENTS AND OBLIGATIONS TYPE IV:

2.2.12.1 Field Performance Requirements:

Type IV sheeting processed and applied to sign blank materials in accordance with the sheeting manufacturer's recommendations shall perform effectively for the number of years stated in this sub article. The retroreflective sheeting will be considered unsatisfactory if tint has deteriorated due to natural causes to the extent that: (1) the sign is ineffective for its intended purpose when viewed from a moving vehicle under normal day and night driving conditions; or (2) Sheeting manufactured of ordinary colors and processed and applied to sign blank materials in accordance with sheeting manufacturer's recommendations, shall perform effectively for at least 10 years or current spec. The retroreflective sheeting will be considered unsatisfactory if it has deteriorated due to natural causes to the extent that: (1) the sign is ineffective for its intended purpose when viewed from a moving vehicle under normal day and night driving conditions; or (2) the coefficient of retroreflection is less than the minimum specified for that sheeting during that period listed. 80% of initial minimum coefficients of retroreflection for type IV up to 7 years and 70% of values up to 10 years or current spec. Failure of process colors or overlay films provided and/or sold for use on recommended sheeting shall constitute a failure of the sign and shall be replaced under the manufacturer's replacement obligations. For screen printed transparent colored areas or transparent colored overlay films on white sheeting, the coefficients of retroreflection shall not be less than 70% of the values for the corresponding integral color. All measurements shall be made after sign cleaning according to the sheeting manufacturer's recommendations.

2.2.12.2 Sheeting Manufacturer's Replacement Obligation:

For ordinary colors where it can be shown that retroreflective signs, supplied and used according to the sheeting manufacturer's recommendations, have not met the performance requirements the sheeting manufacturer shall cover restoration costs as follows for sheeting's shown to be unsatisfactory during: For the entire 10 years or current spec, the sheeting manufacturer will replace the sheeting required to restore the sign surface to its original effectiveness. In addition, during the first seven years the sheeting manufacturer will cover the cost of restoration of the sign surface to its original effectiveness at no cost to agency for materials and labor.

2.2.13 PERFORMANCE REQUIREMENTS AND OBLIGATIONS TYPE XI:

2.2.13.1 Field Performance Requirements:

Type XI For Permanent Signing – Ordinary Colors: Sheeting manufactured of ordinary colors and processed and applied to sign blank materials in accordance with sheeting manufacturer's recommendations, shall perform effectively for at least 12 years or current spec. The retroreflective sheeting will be considered unsatisfactory if it has deteriorated due to natural causes to the extent that: (1) the sign is ineffective for its intended purpose when viewed from a moving vehicle under normal day and night driving conditions; or (2) the coefficient of retroreflection is less than the minimum specified for that sheeting during that period listed. 80% of initial minimum coefficients of retroreflection for type XI up to 7 years and 70% of values up to 12 years or current spec. Failure of process colors or overlay films provided and/or sold for use on recommended sheeting shall constitute a failure of the sign and shall be replaced under the manufacturer's replacement obligations. For screen printed transparent colored areas or transparent colored overlay films on white sheeting, the coefficients of retroreflection shall not be less than 70% of the values for the corresponding integral color. All measurements shall be

made after sign cleaning according to the sheeting manufacturer's recommendations.

Type XI For Permanent Signing – Fluorescent Colors: Sheeting manufactured of fluorescent colors and processed and applied to sign blank materials in accordance with sheeting manufacturer's recommendations shall perform effectively for the number of years stated in this specification. The retroreflective sheeting will be considered unsatisfactory if it has deteriorated due to natural causes to the extent that: (1) the sign is ineffective for its intended purpose when viewed from a moving vehicle under normal day and night driving conditions; or (2) the coefficient of retroreflection is less than the minimum specified for that sheeting during that period listed. 80% of initial minimum required coefficients of retroreflection for type XI values for 5 years and 70% of values up to ~~10~~ 7 years or current spec. Failure of process colors or overlay films provided and/or sold for use on recommended sheeting shall constitute a failure of the entire sign and shall be replaced under the manufacturer's replacement obligations. All measurements shall be made after sign cleaning according to sheeting the manufacturer's recommendations.

Type XI For Temporary Signing – Fluorescent Orange Colors Sheeting manufactured of fluorescent orange and applied to sign blank material in accordance with the sheeting manufacturer's recommendations, is expected to perform effectively for a minimum of three years. The retroreflective sheeting will be considered unsatisfactory if it has deteriorated due to natural causes to the extent that: (1) the sign is ineffective for its intended purpose or (2) retains less than 50% of the minimum coefficient of retroreflection values at 0.2 degrees observation, -4 degrees entrance (measured in accordance with ASTM E810) or current spec. All measurements shall be made after sign cleaning according to the sheeting manufacturer's recommendations. Natural causes include effects of exposure to weather. Natural causes exclude (without limitation) damage from exposure to chemicals, abrasion and other mechanical damage (such as from fasteners used to mount the sign, collisions or mishandling), vandalism, or malicious mischief.

2.2.13.2 Sheeting Manufacturer's Replacement Obligation:

For ordinary colors where it can be shown that retroreflective signs, supplied and used according to the sheeting manufacturer's recommendations, have not met the performance requirements the sheeting manufacturer shall cover restoration costs as follows for sheeting's shown to be unsatisfactory during: For the entire 12 years, the sheeting manufacturer will replace the sheeting required to restore the sign surface to its original effectiveness. In addition, during the first seven years the sheeting manufacturer will cover the cost of restoration of the sign surface to its original effectiveness at no cost to agency for materials and labor. For fluorescent colors where it can be shown that retroreflective signs, supplied and used according to the sheeting manufacturer's recommendations, have not met the performance requirements, the sheeting manufacturer shall cover restoration costs as follows for sheeting's shown to be unsatisfactory: If the failure occurs within the first 5 years from the date of fabrication, the manufacturer will, at its expense, restore the sign surface to its original effectiveness. If the failure occurs within the 6th to 10th year from the date of fabrication, the manufacturer will furnish the necessary amount of sheeting necessary to restore the sign surface to its original effectiveness. Replacement sheeting shall carry the unexpired warranty of the sheet. For temporary signing, fluorescent orange, where it can be shown that the retroreflective sheeting fails to conform to the performance requirements, the sheeting manufacturer's sole responsibility and purchaser's and user's exclusive remedy shall be: Provide replacement sheeting. This sheeting shall carry the unexpired warranty of the sheeting it replaces

2.2.14 PERFORMANCE REQUIREMENTS AND OBLIGATIONS TYPE VIII:

2.2.14.1 Field Performance Requirements:

Retroreflective sheeting processed and applied in accordance with the sheeting manufacturers recommendations, is expected to perform effectively for a minimum of three years. The retroreflective sheeting will be considered unsatisfactory if it has deteriorated due to natural causes to the extent that: (1) the sign is ineffective for the intended purpose or (2) the coefficient of retroreflection, after cleaning is less than a minimum of 115 cd/fc/ft2 at 0.2/-4. All measurements shall be made after sign cleaning according to the sheeting manufacturers recommendations. Natural causes include effects of exposure to weather. Natural causes exclude (without limitation) damage from exposure to chemicals, abrasion, and other mechanical damage (such as from fasteners used to mount the sign, collisions or mishandling) , vandalism, or malicious mischief.

2.2.14.2 Sheeting Manufacturer's Replacement Obligation:

Where it can be shown that the retroreflective sheeting fails to conform to the performance requirements, the sheeting manufacturer's sole responsibility and purchaser's and user's exclusive remedy shall be: Replacement sheeting shall carry the unexpired warranty of the sheeting it replaces.

2.3 READY-MADE SIGNS:

2.3.1 TYPE IV SHEETING:

Type IV is a high-intensity retroreflective sheeting to meet or exceed 3M high intensity prismatic grade 3930, consisting of prismatic lens elements. The sheeting shall have a pre-coated equivalent or pressure sensitive adhesive and shall meet the minimum coefficients as required by ASTM D4956-09 Type IV or current spec.

2.3.2 TYPE VIII SHEETING:

Type VIII sheeting is an unmetallized microprismatic retroreflective element material. Equal to or exceeds 3M fluorescent orange prismatic work zone sheeting 3924S diamond grade material. Type VIII sheeting shall meet the minimum coefficients of retroreflection as required by ASTM D4956-09 Type VIII or current spec.

2.3.3 TYPE XI SHEETING:

Type XI sheeting is an unmetallized microprismatic retroreflective element material meets or exceeds 3M DG3 diamond grade sheeting. Type XI sheeting shall meet the minimum coefficients of retroreflection as required by ASTM D4956-09 Type XI or current spec..

2.3.4 THE RETROREFLECTIVE SHEETING

(All types) shall comply with the liner removal and adhesive
Requirements contained in ASTM D 4956-09 sections 6.8 and 6.9 or current spec..

2.3.5 MISCELLANEOUS SHEETING ITEMS/REFLECTIVE & NON-REFLECTIVE:

The manufacturer must provide documentation, to the satisfaction of the Engineer, for all sheeting types purchased by Maricopa County. The sheeting proposed must have been used successfully in a substantial traffic sign program under similar climatic conditions for at least three years.

2.3.6 NON-REFLECTIVE VINYL SHEETING, & OVERLAYS:

2.3.6.1 Non-reflective vinyl sheeting in various colors. Durable, dimensionally stable vinyl that is pressure sensitive for commercial and industrial type applications which will withstand severe weather and handling conditions.

2.3.6.2 Electronic cuttable Acrylic overlay film The sheeting manufacturer shall manufacture electronic cuttable acrylic overlay films in standard traffic colors which shall be part of sheeting matched component system. in non-perforated, transparent and non-reflective film. Standard Colors

2.3.6.3 Graffiti film protective overlay **3M 1160 or equivalent or current spec**. The sheeting manufacturer shall also manufacture clear protective overlays which are compatible with the sheeting's & when used in accordance with the sheeting manufacturer's instructions, shall not lessen the warranty term of the sheeting material (all types).

2.3.7 COLOR REQUIREMENTS:

Conformance to color requirements shall be determined spectrophotometrically in accordance with ASTM E 1164 or current spec, with instruments utilizing either 45/0 or 0/45 illumination/viewing conditions as described for the 2 degree standard observer and CIE illuminant D65 in accordance with ASTM E 308. For either method, material reference standards used to calibrate the test instrument shall be retroreflective reference standards which have been recently calibrated on a spectrophotometer

2.3.8 SPECIFIC INTENSITY PER UNIT AREA (SIA):

For screen-printed transparent colored areas on white sheeting, the SIA values shall not be less than 70% of the values for the corresponding color in the applicable table.

2.3.9 SHRINKAGE:

Retroreflective sheeting (all types) shall meet the shrinkage requirements of ASTM D4956-09 section 6.6.

2.3.10 FLEXIBILITY:

(The retroreflective sheeting (all types) shall meet the flexibility requirements of ASTM D4956-09 section 6.7.

2.3.11 ACCELERATED OUTDOOR WEATHERING:

The retroreflective sheeting (all types) shall meet the accelerated outdoor weathering and colorfastness requirements of ASTM D4956-09 section 6.4 and 6.5.

2.3.12 PERFORMANCE REQUIREMENTS AND OBLIGATIONS TYPE IV:

2.3.12.1 Field Performance Requirements:

Type IV sheeting processed and applied to sign blank materials in accordance with the sheeting manufacturer's recommendations shall perform effectively for the number of years stated in this sub article. The retroreflective sheeting will be considered unsatisfactory if tint has deteriorated due to natural causes to the extent that: (1) the sign is ineffective for its intended purpose when viewed from a moving vehicle under normal day and night driving conditions; or (2) Sheeting manufactured of ordinary colors and processed and applied to sign blank materials in accordance with sheeting manufacturer's recommendations, shall perform effectively for at least 10 years. The retroreflective sheeting will be considered unsatisfactory if it has deteriorated due to natural causes to

the extent that: (1) the sign is ineffective for its intended purpose when viewed from a moving vehicle under normal day and night driving conditions; or (2) the coefficient of retroreflection is less than the minimum specified for that sheeting during that period listed. 80% of initial minimum coefficients of retroreflection for type IV up to 7 years and 70% of values up to 10 years Failure of process colors or overlay films provided and/or sold for use on recommended sheeting shall constitute a failure of the sign and shall be replaced under the manufacturer's replacement obligations. For screen printed transparent colored areas or transparent colored overlay films on white sheeting, the coefficients of retroreflection shall not be less than 70% of the values for the corresponding integral color. All measurements shall be made after sign cleaning according to the sheeting manufacturer's recommendations.

2.3.12.2 Sheeting Manufacturer's Replacement Obligation:

For ordinary colors where it can be shown that retroreflective signs, supplied and used according to the sheeting manufacturer's recommendations, have not met the performance requirements the sheeting manufacturer shall cover restoration costs as follows for sheeting's shown to be unsatisfactory during: For the entire 10 years, the sheeting manufacturer will replace the sheeting required to restore the sign surface to its original effectiveness. In addition, during the first seven years the sheeting manufacturer will cover the cost of restoration of the sign surface to its original effectiveness at no cost to agency for materials and labor.

2.3.13 PERFORMANCE REQUIREMENTS AND OBLIGATIONS TYPE XI:

2.3.13.1 Field Performance Requirements:

Type XI For Permanent Signing – Ordinary Colors: Sheeting manufactured of ordinary colors and processed and applied to sign blank materials in accordance with sheeting manufacturer's recommendations, shall perform effectively for at least 12 years. The retroreflective sheeting will be considered unsatisfactory if it has deteriorated due to natural causes to the extent that: (1) the sign is ineffective for its intended purpose when viewed from a moving vehicle under normal day and night driving conditions; or (2) the coefficient of retroreflection is less than the minimum specified for that sheeting during that period listed. 80% of initial minimum coefficients of retroreflection for type XI up to 7 years and 70% of values up to 12 years Failure of process colors or overlay films provided and/or sold for use on recommended sheeting shall constitute a failure of the sign and shall be replaced under the manufacturer's replacement obligations. For screen printed transparent colored areas or transparent colored overlay films on white sheeting, the coefficients of retroreflection shall not be less than 70% of the values for the corresponding integral color. All measurements shall be made after sign cleaning according to the sheeting manufacturer's recommendations.

Type XI For Permanent Signing – Fluorescent Colors: Sheeting manufactured of fluorescent colors and processed and applied to sign blank materials in accordance with sheeting manufacturer's recommendations shall perform effectively for the number of years stated in this specification. The retroreflective sheeting will be considered unsatisfactory if it has deteriorated due to natural causes to the extent that: (1) the sign is ineffective for its intended purpose when viewed from a moving vehicle under normal day and night driving conditions; or (2) the coefficient of retroreflection is less than the minimum specified for that sheeting during that period listed. 80% of initial minimum required coefficients of retroreflection for type XI values for 5 years and 70% of values up to ~~10~~ 7 years Failure of process colors or

overlay films provided and/or sold for use on recommended sheeting shall constitute a failure of the entire sign and shall be replaced under the manufacturer's replacement obligations. All measurements shall be made after sign cleaning according to sheeting the manufacturer's recommendations.

Type XI For Temporary Signing – Fluorescent Orange Colors Sheeting manufactured of fluorescent orange and applied to sign blank material in accordance with the sheeting manufacturer's recommendations, is expected to perform effectively for a minimum of three years. The retroreflective sheeting will be considered unsatisfactory if it has deteriorated due to natural causes to the extent that: (1) the sign is ineffective for its intended purpose or (2) retains less than 50% of the minimum coefficient of retroreflection values at 0.2 degrees observation, -4 degrees entrance (measured in accordance with ASTM E810) or current spec. All measurements shall be made after sign cleaning according to the sheeting manufacturer's recommendations. Natural causes include effects of exposure to weather. Natural causes exclude (without limitation) damage from exposure to chemicals, abrasion and other mechanical damage (such as from fasteners used to mount the sign, collisions or mishandling), vandalism, or malicious mischief.

2.3.13.2 Sheeting Manufacturer's Replacement Obligation:

For ordinary colors where it can be shown that retroreflective signs, supplied and used according to the sheeting manufacturer's recommendations, have not met the performance requirements the sheeting manufacturer shall cover restoration costs as follows for sheeting's shown to be unsatisfactory during: For the entire 12 years, the sheeting manufacturer will replace the sheeting required to restore the sign surface to its original effectiveness. In addition, during the first seven years the sheeting manufacturer will cover the cost of restoration of the sign surface to its original effectiveness at no cost to agency for materials and labor. For fluorescent colors where it can be shown that retroreflective signs, supplied and used according to the sheeting manufacturer's recommendations, have not met the performance requirements, the sheeting manufacturer shall cover restoration costs as follows for sheeting's shown to be unsatisfactory: If the failure occurs within the first 5 years from the date of fabrication, the manufacturer will, at its expense, restore the sign surface to its original effectiveness. If the failure occurs within the 6th to 10th year from the date of fabrication, the manufacturer will furnish the necessary amount of sheeting necessary to restore the sign surface to its original effectiveness. Replacement sheeting shall carry the unexpired warranty of the sheet. For temporary signing, fluorescent orange, where it can be shown that the retroreflective sheeting fails to conform to the performance requirements, the sheeting manufacturer's sole responsibility and purchaser's and user's exclusive remedy shall be: Provide replacement sheeting. This sheeting shall carry the unexpired warranty of the sheeting it replaces

2.3.14 PERFORMANCE REQUIREMENTS AND OBLIGATIONS TYPE VIII:

2.3.14.1 Field Performance Requirements:

Retroreflective sheeting processed and applied in accordance with the sheeting manufacturers recommendations, is expected to perform effectively for a minimum of three years. The retroreflective sheeting will be considered unsatisfactory if it has deteriorated due to natural causes to the extent that: (1) the sign is ineffective for the intended purpose or (2) the coefficient of retroreflection, after cleaning is less than a minimum of 115 cd/fc/ft2 at 0.2/-4. All measurements shall be made after sign cleaning according to the sheeting manufacturers recommendations. Natural causes include effects of exposure to

weather. Natural causes exclude (without limitation) damage from exposure to chemicals, abrasion, and other mechanical damage (such as from fasteners used to mount the sign, collisions or mishandling) , vandalism, or malicious mischief.

2.3.14.2 Sheeting Manufacturer's Replacement Obligation:

Where it can be shown that the retroreflective sheeting fails to conform to the performance requirements, the sheeting manufacturer's sole responsibility and purchaser's and users exclusive remedy shall be: Replacement sheeting shall carry the unexpired warranty of the sheeting it replaces.

2.3.15 BASE METAL:

2.3.15.1 Description:

The base metal shall be new sheet aluminum of alloys 6061-T6 or 5052-H38 or current spec conforming to the requirements of ASTM Designation: B209 or current spec, the thickness of the aluminum sheet shall be as indicated on the Item Number Description unless otherwise specified. The alloy and temper designations shall be verified by mill certification. Each blank will be furnished with standard 3/8" hole locations and corner radii, unless otherwise noted, as shown on Maricopa County Department of Transportation, Standard Details 2061-1 through 2061-21

2.3.15.2 Fabrication:

The fabrication of all metal parts shall be accomplished in a uniform and workmanlike manner. The sign panels are to be cut as shown on the sign specification sheets. This dimensional tolerance of the panels shall be size and shape free of buckles, warp, dents, cockles, burrs, sharp edges and any other defects resulting from fabrication. All possible fabrications, including shearing, cutting and punching of holes shall be completed prior to the base metal pretreatment.

~~2.3.15.3 Stamping MCDOT:~~

~~The contractor shall stamp an impression of "MCDOT" with ¼" text height into the back of all aluminum blanks so that the image is lowered into the surface of the aluminum. It is the contractor's responsibility to make sure all dies are maintained to create a uniformed appearance. Any blanks that are not stamped "MCDOT" will be rejected.~~

2.3.16 SCREENING INKS, PROCESS PASTE, CLEARS AND THINNERS:

2.3.16.1 Pretreatment:

The front and back surfaces of the aluminum base metal shall be cleaned, deoxidized and coated with a light, tightly adherent chromated conversion coating free of any powdery residue. The base metal pretreatment process shall be in conformance with Section 5, "Recommended Processing Methods" of ASTM Designation: B 449 or current spec. The coating weight shall be less 2 (10-34 mg/sq. ft.), with a median of 25 mg/sq. ft. as the optimum coating weight. All treatment tanks or spray applied pretreatment is performed by immersion methods. The tanks shall be of sufficient size to accommodate the complete panel. Titration equipment shall be available for the inspector's use to check the solution strengths.

The cleaned and coated base metal shall be handled only by a mechanical device or by operators wearing clean cotton or rubber gloves. After cleaning

and coating operations, the panels shall be protected at all times from contact or exposure to grease oils, dust or other contaminants. Only those screening inks, process pastes clears and thinners recommended by the reflective sheeting manufacturer shall be used. All such materials shall be used only in accordance with sheeting manufacturer's recommendations for the items stated above.

Such recommendations shall be obtained in writing and a copy furnished to MCDOT . Any changes in those items stated above which a manufacturer deems necessary shall first be approved in writing by the MCDOT procurement representative.

2.3.17 OUTDOOR WEATHERABILITY:

The outdoor weatherability of the applied inks or paste shall be comparable to the outdoor durability of the reflective sheeting as stated in Section 2.3.11

2.3.18 ADHERENCE:

No process inks shall be removed when tested by applying cellophane tape over a properly cured, color processed area and removing the tape with one quick motion. The tape shall be 3M™ Company Scotch Brand Cellophane Tape No. 600, 3/4" wide or equal.

2.3.19 SOLVENT-RESISTANCE:

Screened sign faces shall be properly cured and solvent resistant to cleaning solvents recommended by the manufacturer of the reflective sheeting.

2.3.20 SIGN PANEL FABRICATION:

The message shall be one or a combination of the following types:

2.3.20.1 Direct screening or reverse screened. The finished screened sign shall comply with all requirements of these specifications, including color and reflectivity.

2.3.20.2 Pressure sensitive computer cut-out reflective sheeting of the same type as specified in Section 2.3.1 of these specifications. Such sheeting shall comply with all requirements of these specifications, including color and reflectivity.

2.3.20.3 Black pressure sensitive computer cut out non-reflective sheeting from the approved manufacturers will be permitted in lieu of black process paste.

2.3.20.4 The sign faces shall conform to the dimensions and letter series shown on Exhibits (1) through (21).

2.3.21 SPLICES IN REFLECTIVE SHEETING:

No finished sign panel shall have splices.

2.3.22 FINISH:

The finished signs shall be flat within a ratio of 0.04 inches per linear foot when measured across the plane of each panel from opposite corners or at any locations on the panel. All surface exposed to weathering shall be free of any defects in the coating that may impair the serviceability or detract from the general appearance or color matching of the sign. The finished sign shall be clean and free from all burrs, sharp edges, delaminated reflective sheeting and aluminum marks. Signs with any defects or damage that would affect their appearance or service ability will not be acceptable. No air pockets or bubbles shall exist between the sheeting and the base material.

2.3.23 INSPECTION:

All material and finished signs are subject to inspection by the County at the Traffic Operations office at the time of delivery. Signs not conforming in all respects to the requirements of these specifications will be returned to the Vendor for replacement at the cost of the Vendor.

2.3.24 SIGN RECYCLING:

All pricing shall be bid on a per square foot basis. Gross square footage of shapes (octagon, triangle, etc.) will be used for calculation purposes.

Example: 24" octagon equals 4.0 square feet

Bid price to include freight charges both ways. All recycled sign blanks shall be stripped using a mechanical process. Stripped sign blank thickness shall not be reduced more than 0.01" from original thickness.

Credit shall be provided for scrap metal received and shall be applied at the current, per pound, local recycling market rate. Credit amount shall be shown on the invoice. Contractor to state the market index to be used on their pricing page along with the margin % above or below this index.

2.3.25 SPECIAL SIGNS

Signs that are an urgent need or unusual size will be handled as a Task Order. A Task Order will consist of asking all listed vendors for pricing based on but not limited to, sign size information, drawing attachments, delivery cost and date. Award of a Task Order will be based on lowest cost submitted.

3.0 PURCHASING REQUIREMENTS:

3.1 DELIVERY AND INSTALLATION:

3.1.1 Delivery shall be F.O.B. Destination Freight Prepaid within seven (7) days of receipt of Using Agency purchase order, to any delivery location within Maricopa County.

3.1.2 Items confirmed by County to be Special Order, or non-regular are exempt from the seven day delivery receipt requirement. Delivery time for these exempt items is to be agreed upon by contractor and county when ordered. County reserves the right to procure items from other suppliers if contractor cannot meet county business timelines.

3.2 EXPEDITED DELIVERY:

3.2.1 If the Using Agency determines that expedited delivery or other alternate shipping is required, it shall notify the Contractor. The Contractor shall determine any additional costs associated with such delivery terms and communicate that cost to the MCDOT procurement contact. .

3.2.2 The MCDOT procurement contact shall not advise the Contractor to proceed with an expedited shipment until acceptable terms are agreed upon and a purchase order is issued. Upon agreeing to the additional costs, the MCDOT procurement contact shall advise the Contractor to proceed.

3.2.3 Upon receipt of material(s) and invoicing, the Using Agency shall ensure that any additional charges are in compliance with and do not exceed agreed to costs. The Using Agency shall retain all documents related to these costs within the agency purchase file.

3.3 SHIPPING DOCUMENTS:

A packing list or other suitable shipping document shall accompany each shipment and shall include the following:

3.3.1 Contract Serial number.

3.3.2 Contractor's name and address.

3.3.3 Using Agency name and address.

3.3.4 Using Agency purchase order number.

3.3.5 A description of product(s) shipped, including item number(s), quantity (ies), number of containers and package number(s), as applicable.

3.4 SAMPLES:

The Contractor may be requested to furnish samples of material(s) bid for examination by the County. Any materials so requested shall be furnished within TEN (10) working days from the ate of request and furnished at no cost to the County and sent to the address designated in the requesting correspondence.

3.5 TESTING:

Unless otherwise specified, materials purchased will be inspected by the Using Agency to ensure the materials meet the quality and quantity requirements of the Specifications. When deemed necessary by the County, samples of the materials may be taken at random from stock received for submission to a commercial laboratory or other appropriate agency for analysis and tests as to whether the materials conform in all respects to the Specifications. In cases where commercial laboratory reports determine that the materials do not meet the Specifications, the expense of such analysis shall be borne by the Contractor.

3.6 ACCEPTANCE:

Upon delivery and any successful installation, the material(s) shall be deemed accepted and the warranty period shall begin. All documentation shall be completed prior to final acceptance.

3.7 WARRANTY:

3.7.1 All items furnished under this Contract shall conform to the requirements of this Contract and shall be free from defects in design, materials and workmanship.

3.7.2 The warranty period for workmanship and materials shall refer to the technical requirements. .

3.7.2.1 The Contractor shall indicate on the Price Sheet the duration of the warranty and any applicable limitations or conditions which may apply.

3.7.2.2 The Contractor agrees that he will, at his own expense, provide all labor and parts required to remove, repair or replace, and reinstall any such defective workmanship and/or materials which becomes or is found to be defective during the term of this warranty. The Contractor shall guarantee the equipment to be supplied complies with all applicable regulations.

3.8 BRAND NAME:

The County reserves the right to request samples to determine quality and acceptability of materials bid by Contractor. In some cases, brand names have been listed in order to define the

desired quality and are not intended to be restrictive or to limit competition. Materials substantially equivalent to those designated shall qualify for consideration.

3.9 ORDER CUTOFF INFORMATION:

Contractors submitting bids shall advise the County of all known order cutoff dates for the equipment / product(s) specified in this solicitation at the time of bid submission. Notification of any subsequent cutoff date(s) (learned after submission of bid) shall also be the Contractor's responsibility. The Contractor shall advise the County of subsequent cutoff dates by notifying the Procurement Officer, in writing, of the new information.

3.10 USAGE REPORT:

The Contractor shall furnish the County a usage report upon request delineating the acquisition activity governed by the Contract. The format of the report shall be approved by the County and shall disclose the quantity and dollar value of each contract item by individual unit.

3.11 INVOICES AND PAYMENTS:

3.11.1 The Contractor shall submit one (1) legible copy of their detailed invoice before payment(s) can be made. Incomplete invoices will not be processed. At a minimum, the invoice must provide the following information:

- Company name, address and contact
- County bill-to name and contact information
- Contract Serial Number or
- County purchase order number
- Invoice number and date
- Payment terms
- Date of service or delivery
- Quantity (number of days or weeks)
- Contract Item number(s)
- Description of Purchase (product or services)
- Pricing per unit of purchase
- Freight (if applicable)
- Extended price
- Mileage w/rate (if applicable)
- Arrival and completion time (if applicable)
- Total Amount Due

3.11.2 Problems regarding billing or invoicing shall be directed to the using agency as listed on the Purchase Order.

3.11.3 Payment shall be made to the Contractor by Accounts Payable through the Maricopa County Vendor Express Payment Program. This is an Electronic Funds Transfer (EFT) process. After Contract Award the Contractor shall complete the Vendor Registration Form located on the County Department of Finance Vendor Registration Web Site (http://www.maricopa.gov/Finance/Vendors.aspx).

3.11.4 Discounts offered in the contract shall be calculated based on the date a properly completed invoice is received by the County (ROI).

3.11.5 EFT payments to the routing and account numbers designated by the Contractor will include the details on the specific invoices that the payment covers. The Contractor is required to discuss remittance delivery capabilities with their designated financial institution for access to those details.

3.12 APPLICABLE TAXES:

3.12.1 **Payment of Taxes:** The Contractor shall pay all applicable taxes. With respect to any installation labor on items that are not attached to real property performed by Contractor under the terms of this Contract, the installation labor cost and the gross receipts for materials provided shall be listed separately on the Contractor's invoices.

3.12.2 **State and Local Transaction Privilege Taxes:** Maricopa County is subject to all applicable state and local transaction privilege taxes. To the extent any state and local transaction privilege taxes apply to sales made under the terms of this contract_it is the responsibility of the seller to collect and remit all applicable taxes to the proper taxing jurisdiction of authority.

3.12.3 **Tax Indemnification:** Contractor and all subcontractors shall pay all Federal, state, and local taxes applicable to its operation and any persons employed by the Contractor. Contractor shall, and require all subcontractors to hold Maricopa County harmless from any responsibility for taxes, damages and interest, if applicable, contributions required under Federal, and/or state and local laws and regulations and any other costs including transaction privilege taxes, unemployment compensation insurance, Social Security and Worker's Compensation.

3.13 POST AWARD MEETING:

The Contractor may be required to attend a post-award meeting with the Using Agency to discuss the terms and conditions of this Contract. This meeting will be coordinated by the Procurement Officer of the Contract.

3.14 STRATEGIC ALLIANCE for VOLUME EXPENDITURES ($AVE)

The County is a member of the $AVE cooperative purchasing group. $AVE includes the State of Arizona, many Phoenix metropolitan area municipalities, and many K-12 unified school districts. Under the $AVE Cooperative Purchasing Agreement, and with the concurrence of the successful Respondent under this solicitation, a member of $AVE may access a contract resulting from a solicitation issued by the County. If you **do not** want to grant such access to a member of $AVE, **please so state** in your proposal. In the absence of a statement to the contrary, the County will assume that you do wish to grant access to any contract that may result from this Request for Proposal.

3.15 INTERGOVERNMENTAL COOPERATIVE PURCHASING AGREEMENTS (ICPA's)

County currently holds ICPA's with numerous governmental entities throughout the State of Arizona. These agreements allow those entities, with the approval of the Contractor, to purchase their requirements under the terms and conditions of the County Contract. Please indicate on Attachment A, your acceptance or rejection regarding such participation of other governmental entities. Your response will not be considered as an evaluation factor in awarding a contract.

4.0 CONTRACTUAL TERMS & CONDITIONS:

4.1 CONTRACT TERM:

This Invitation for Bid is for awarding a firm, fixed-price purchasing contract to cover a term of one (1) year.

4.2 OPTION TO RENEW:

The County may, at its option and with the concurrence of the Contractor, renew the term of this Contract up to a maximum of four (4) additional years, (or at the County's sole discretion, extend the contract on a month to month basis for a maximum of six (6) months after expiration). The Contractor shall be notified in writing by the Office of Procurement Services of the County's

intention to renew the contract term at least sixty (60) calendar days prior to the expiration of the original contract term.

4.3 PRICE ADJUSTMENTS:

Any requests for reasonable price adjustments must be submitted sixty (60) days prior to the Contract expiration. Requests for adjustment in cost of labor and/or materials must be supported by appropriate documentation. If County agrees to the adjusted price terms, County shall issue written approval of the change. The reasonableness of the request will be determined by comparing the request with the Consumer Price Index or by performing a market survey.

4.4 INDEMNIFICATION:

To the fullest extent permitted by law, and to the extent that claims, damages, losses or expenses are not covered and paid by insurance purchased by the Contractor, the Contractor shall defend indemnify and hold harmless the County (as Owner), its agents, representatives, agents, officers, directors, officials, and employees from and against all claims, damages, losses, and expenses (including, but not limited to attorneys' fees, court costs, expert witness fees, and the costs and attorneys' fees for appellate proceedings) arising out of, or alleged to have resulted from the negligent acts, errors, omissions, or mistakes relating to the performance of this Contract.

Contractor's duty to defend, indemnify, and hold harmless the County, its agents, representatives, agents, officers, directors, officials, and employees shall arise in connection with any claim, damage, loss, or expense that is attributable to bodily injury, sickness, disease, death or injury to, impairment of, or destruction of tangible property, including loss of use resulting there from, caused by negligent acts, errors, omissions, or mistakes in the performance of this Contract, but only to the extent caused by the negligent acts or omissions of the Contractor, a subcontractor, any one directly or indirectly employed by them, or anyone for whose acts they may be liable, regardless of whether or not such claim, damage, loss, or expense is caused in part by a party indemnified hereunder.

The amount and type of insurance coverage requirements set forth herein will in no way be construed as limiting the scope of the indemnity in this paragraph.

The scope of this indemnification does not extend to the sole negligence of County.

4.5 INSURANCE

4.5.1 Contractor, at Contractor's own expense, shall purchase and maintain the herein stipulated minimum insurance from a company or companies duly licensed by the State of Arizona and possessing a current A.M. Best, Inc. rating of B++. In lieu of State of Arizona licensing, the stipulated insurance may be purchased from a company or companies, which are authorized to do business in the State of Arizona, provided that said insurance companies meet the approval of County. The form of any insurance policies and forms must be acceptable to County.

4.5.2 All insurance required herein shall be maintained in full force and effect until all work or service required to be performed under the terms of the Contract is satisfactorily completed and formally accepted. Failure to do so may, at the sole discretion of County, constitute a material breach of this Contract.

4.5.3 Contractor's insurance shall be primary insurance as respects County, and any insurance or self-insurance maintained by County shall not contribute to it.

4.5.4 Any failure to comply with the claim reporting provisions of the insurance policies or any breach of an insurance policy warranty shall not affect the County's right to coverage afforded under the insurance policies.

4.5.5 The insurance policies may provide coverage that contains deductibles or self-insured retentions. Such deductible and/or self-insured retentions shall not be applicable with respect to the coverage provided to County under such policies. Contractor shall be solely responsible for the deductible and/or self-insured retention and County, at its option, may require Contractor to secure payment of such deductibles or self-insured retentions by a surety bond or an irrevocable and unconditional letter of credit.

4.5.6 The insurance policies required by this Contract, except Workers' Compensation and Errors and Omissions, shall name County, its agents, representatives, officers, directors, officials and employees as Additional Insureds.

4.5.7 The policies required hereunder, except Workers' Compensation and Errors and Omissions, shall contain a waiver of transfer of rights of recovery (subrogation) against County, its agents, representatives, officers, directors, officials and employees for any claims arising out of Contractor's work or service.

4.5.8 **Commercial General Liability.**

Commercial General Liability insurance and, if necessary, Commercial Umbrella insurance with a limit of not less than $1,000,000 for each occurrence, $2,000,000 Products/Completed Operations Aggregate, and $2,000,000 General Aggregate Limit. The policy shall include coverage for premises liability, bodily injury, broad form property damage, personal injury, products and completed operations and blanket contractual coverage, and shall not contain any provisions which would serve to limit third party action over claims. There shall be no endorsement or modifications of the CGL limiting the scope of coverage for liability arising from explosion, collapse, or underground property damage.

4.5.9 **Automobile Liability.**

Commercial/Business Automobile Liability insurance and, if necessary, Commercial Umbrella insurance with a combined single limit for bodily injury and property damage of not less than $500,000 each occurrence with respect to any of the Contractor's owned, hired, and non-owned vehicles assigned to or used in performance of the Contractor's work or services or use or maintenance of the Premises under this Contract.

4.5.10 **Workers' Compensation.**

Workers' Compensation insurance to cover obligations imposed by federal and state statutes having jurisdiction of Contractor's employees engaged in the performance of the work or services under this Contract; and Employer's Liability insurance of not less than $500,000 for each accident, $500,000 disease for each employee, and $500,000 disease policy limit.

Contractor, its contractors and its subcontractors waive all rights against Contract and its agents, officers, directors and employees for recovery of damages to the extent these damages are covered by the Workers' Compensation and Employer's Liability or commercial umbrella liability insurance obtained by Contractor, its contractors and its subcontractors pursuant to this Contract.

4.5.11 **Errors and Omissions (Professional Liability) Insurance.**

Errors and Omissions (Professional Liability) insurance and, if necessary, Commercial Umbrella insurance, which will insure and provide coverage for errors or omissions or professional liability of the **CONTRACTOR**, with limits of no less than $1,000,000 for each claim.

4.6 ORDERING AUTHORITY.

4.6.1 Any request for purchase of product(s) shall be accompanied by a valid purchase order, issued by Office of Procurement Services, a Purchase Order issued by the using Department or direction by a Certified Agency Procurement Aid (CAPA) with a Purchase Card for payment.

4.7 REQUIREMENTS CONTRACT:

4.7.1 **The Contract does not guarantee any minimum or maximum purchases will be made. If purchases are made for the materials or requirement contained in the Contract, they will be purchased from the Contractor awarded that line item. Orders will only be placed under this contract when the County identifies a need and proper authorization and documentation have been approved.**

4.7.2 **Contractors agree to accept verbal notification of cancellation of Purchase Orders from the County Procurement Officer with written notification to follow. By submitting a bid in response to this Invitation for Bids, the Contractor specifically acknowledges to be bound by this cancellation policy.**

4.8 UNCONDITIONAL TERMINATION FOR CONVENIENCE:

Maricopa County may terminate the resultant Contract for convenience by providing sixty (60) calendar days advance notice to the Contractor.

4.9 TERMINATION FOR DEFAULT:

The County may, by written notice of default to the Contractor, terminate this contract in whole or in part if the Contractor fails to:

4.9.1 Deliver the supplies or to perform the services within the time specified in this contract or any extension;

4.9.2 Make progress, so as to endanger performance of this contract; or

4.9.3 Perform any of the other provisions of this contract.

4.9.4 The County's right to terminate this contract under these subparagraph may be exercised if the Contractor does not cure such failure within 10 days (or more if authorized in writing by the County) after receipt of the notice from the Procurement Officer specifying the failure.

4.10 STATUTORY RIGHT OF CANCELLATION FOR CONFLICT OF INTEREST:

Notice is given that pursuant to A.R.S. § 38-511 the County may cancel any Contract without penalty or further obligation within three years after execution of the contract, if any person significantly involved in initiating, negotiating, securing, drafting or creating the contract on behalf of the County is at any time while the Contract or any extension of the Contract is in effect, an employee or agent of any other party to the Contract in any capacity or consultant to any other party of the Contract with respect to the subject matter of the Contract. Additionally, pursuant to A.R.S § 38-511 the County may recoup any fee or commission paid or due to any person significantly involved in initiating, negotiating, securing, drafting or creating the contract on behalf of the County from any other party to the contract arising as the result of the Contract.

4.11 OFFSET FOR DAMAGES;

In addition to all other remedies at Law or Equity, the County may offset from any money due to the Contractor any amounts Contractor owes to the County for damages resulting from breach or deficiencies in performance of the contract.

4.12 ADDITIONS/DELETIONS OF SERVICE:

4.12.1 The County reserves the right to add and/or delete materials to a Contract. If a service requirement is deleted, payment to the Contractor will be reduced proportionately, to the amount of service reduced in accordance with the bid price. If additional materials are required from a Contract, prices for such additions will be negotiated between the Contractor and the County.

4.13 SUBCONTRACTING:

4.13.1 The Contractor may not assign to another Contractor or Subcontract to another party for performance of the terms and conditions hereof without the written consent of the County. All correspondence authorizing subcontracting must reference the Bid Serial Number and identify the job project.

4.13.2 The Subcontractor's rate for the job shall not exceed that of the Prime Contractor's rate, as bid in the pricing section, unless the Prime Contractor is willing to absorb any higher rates. The Subcontractor's invoice shall be invoiced directly to the Prime Contractor, who in turn shall pass-through the costs to the County, without mark-up. A copy of the Subcontractor's invoice must accompany the Prime Contractor's invoice.

4.14 AMENDMENTS:

All amendments to this Contract shall be in writing and approved/signed by both parties. Maricopa County Office of Procurement Services shall be responsible for approving all amendments for Maricopa County.

4.15 ACCESS TO AND RETENTION OF RECORDS FOR THE PURPOSE OF AUDIT AND/OR OTHER REVIEW:

4.15.1 **In accordance with section MCI 371 of the Maricopa County Procurement Code the Contractor agrees to retain (physical or digital copies of) all books, records, accounts, statements, reports, files, and other records and back-up documentation relevant to this Contract for six (6) years after final payment or until after the resolution of any audit questions which could be more than six (6) years, whichever is latest. The County, Federal or State auditors and any other persons duly authorized by the Department shall have full access to, and the right to examine, copy and make use of, any and all said materials.**

4.15.2 **If the Contractor's books, records , accounts, statements, reports, files, and other records and back-up documentation relevant to this Contract are not sufficient to support and document that requested services were provided, the Contractor shall reimburse Maricopa County for the services not so adequately supported and documented.**

4.16 VALIDITY:

The invalidity, in whole or in part, of any provision of this Contract shall not void or affect the validity of any other provision of the Contract.

4.17 RIGHTS IN DATA:

The County shall have the use of data and reports resulting from a Contract without additional cost or other restriction except as may be established by law or applicable regulation. Each party shall supply to the other party, upon request, any available information that is relevant to a Contract and to the performance thereunder.

4.18 RELATIONSHIPS:

4.18.1 **In the performance of the services described herein, the Contractor shall act solely as an independent contractor, and nothing herein or implied herein shall at any time be construed as to create the relationship of employer and employee, co-employee, partnership, principal and agent, or joint venture between the County and the Contractor.**

4.18.2 **The County reserves the right of final approval on proposed staff. Also, upon request by the County, the Contractor will be required to remove any employees working on County projects and substitute personnel based on the discretion of the County within two business days, unless previously approved by the County.**

4.19 NON-DISCRIMINATION:

CONTRACTOR agrees to comply with all provisions and requirements of Arizona Executive Order 2009-09 including flow down of all provisions and requirements to any subcontractors. Executive Order 2009-09 supersedes Executive order 99-4 and amends Executive order 75-5 and may be viewed and downloaded at the Governor of the State of Arizona's website http://azmemory.azlibrary.gov/cdm/singleitem/collection/execorders/id/680/rec/1 which is hereby incorporated into this contract as if set forth in full herein. During the performance of this contract, CONTRACTOR shall not discriminate against any employee, client or any other individual in any way because of that person"s age, race, creed, color, religion, sex, disability or national origin.

4.20 CERTIFICATION REGARDING DEBARMENT AND SUSPENSION:

4.20.1 **The undersigned (authorized official signing on behalf of the Contractor) certifies to the best of his or her knowledge and belief that the Contractor, its current officers and directors;**

4.20.1.1 **are not presently debarred, suspended, proposed for debarment, declared ineligible, or voluntarily excluded from being awarded any contract or grant by any United States Department or Agency or any state, or local jurisdiction;**

4.20.1.2 **have not within three (3) year period preceding this Contract;**

4.20.1.2.1 **been convicted of fraud or any criminal offense in connection with obtaining, attempting to obtain, or as the result of performing a government entity (Federal, State or local) transaction or contract; and;**

4.20.1.2.2 **been convicted of violation of any Federal or State antitrust statues or conviction for embezzlement, theft, forgery, bribery, falsification or destruction of records, making false statements, or receiving stolen property regarding a government entity transaction or contract;**

4.20.1.2.3 **are not presently indicted or criminally charged by a government entity (Federal, State or local) with commission of any criminal offenses in connection with obtaining, attempting to obtain, or as the result of performing a government entity public (Federal, State or local) transaction or contract; and are not presently facing any civil charges from any governmental entity regarding obtaining, attempting to obtain, or from performing any governmental entity contract or other transaction; and have not within a three (3) year period preceding this Contract had any public transaction (Federal, State or local) terminated for cause or default.**

4.20.1.3 **If any of the above circumstances described in the paragraph are applicable to the entity submitting a bid for this requirement, include with your bid an explanation of the matter including any final resolution.**

4.20.2 **The Contractor shall include, without modification, this clause in all lower tier covered transactions (i.e. transactions with subcontractors) and in all solicitations for lower tier covered transactions related to this Contract.**

4.21 VERIFICATION REGARDING COMPLIANCE WITH ARIZONA REVISED STATUTES §41-4401 AND FEDERAL IMMIGRATION LAWS AND REGULATIONS:

4.21.1 By entering into the Contract, the Contractor warrants compliance with the Immigration and Nationality Act (INA using e-verify) and all other federal immigration laws and regulations related to the immigration status of its employees and A.R.S. §23-214(A). The contractor shall obtain statements from its subcontractors certifying compliance and shall furnish the statements to the Procurement Officer upon request. These warranties shall remain in effect through the term of the Contract. The Contractor and its subcontractors shall also maintain Employment Eligibility Verification forms (I-9) as required by the Immigration Reform and Control Act of 1986, as amended from time to time, for all employees performing work under the Contract and verify employee compliance using the E-verify system and shall keep a record of the verification for the duration of the employee's employment or at least three years, whichever is longer. I-9 forms are available for download at USCIS.GOV.

4.21.2 The County retains the legal right to inspect contractor and subcontractor employee documents performing work under this Contract to verify compliance with paragraph 4.21 of this Section. Contractor and subcontractor shall be given reasonable notice of the County's intent to inspect and shall make the documents available at the time and date specified. Should the County suspect or find that the Contractor or any of its subcontractors are not in compliance, the County will consider this a material breach of the contract and may pursue any and all remedies allowed by law, including, but not limited to: suspension of work, termination of the Contract for default, and suspension and/or debarment of the Contractor. All costs necessary to verify compliance are the responsibility of the Contractor.

4.22 CONTRACTOR LICENSE REQUIREMENT:

4.22.1 The Respondent shall procure all permits, insurance, licenses and pay the charges and fees necessary and incidental to the lawful conduct of his/her business, and as necessary complete any required certification requirements, required by any and all governmental or non-governmental entities as mandated to maintain compliance with and in good standing for all permits and/or licenses. The Respondent shall keep fully informed of existing and future trade or industry requirements, Federal, State and Local laws, ordinances, and regulations which in any manner affect the fulfillment of a Contract and shall comply with the same. Contractor shall immediately notify both Office of Procurement Services and the using agency of any and all changes concerning permits, insurance or licenses.

4.22.2 Respondents furnishing finished products, materials or articles of merchandise that will require installation or attachment as part of the Contract, shall possess any licenses required. A Respondent is not relieved of its obligation to posses the required licenses by subcontracting of the labor portion of the Contract. Respondents are advised to contact the Arizona Registrar of Contractors, Chief of Licensing, at (602) 542-1525 to ascertain licensing requirements for a particular contract. Respondents shall identify which license(s), if any, the Registrar of Contractors requires for performance of the Contract.

4.23 INFLUENCE

As prescribed in MC1-1202 of the Maricopa County Procurement Code, any effort to influence an employee or agent to breach the Maricopa County Ethical Code of Conduct or any ethical conduct, may be grounds for Disbarment or Suspension under MC1-902.
An attempt to influence includes, but is not limited to:

4.23.1 A Person offering or providing a gratuity, gift, tip, present, donation, money, entertainment or educational passes or tickets, or any type valuable contribution or subsidy,

4.23.2 That is offered or given with the intent to influence a decision, obtain a contract, garner favorable treatment, or gain favorable consideration of any kind.

If a Person attempts to influence any employee or agent of Maricopa County, the Chief Procurement Officer, or his designee, reserves the right to seek any remedy provided by the Maricopa County Procurement Code, any remedy in equity or in the law, or any remedy provided by this contract.

4.24 PUBLIC RECORDS:

Under Arizona law, all Offers submitted and opened are public records and must be retained by the Records Manager at the Office of Procurement Services. Offers shall be open to public inspection and copying after Contract award and execution, except for such Offers or sections thereof determined to contain proprietary or confidential information by the Office of Procurement Services. If an Offeror believes that information in its Offer or any resulting Contract should not be released in response to a public record request under Arizona law, the Offeror shall indicate the specific information deemed confidential or proprietary and submit a statement with its offer detailing the reasons that the information should not be disclosed. Such reasons shall include the specific harm or prejudice which may arise from disclosure. The Records Manager of the Office of Procurement Services shall determine whether the identified information is confidential pursuant to the Maricopa County Procurement Code.

4.25 **TAX (COMMODITIES):**

Tax shall not be invoiced against contractor's labor. Sales/use tax will be determined by County. Tax will not be used in determining low price.

4.26 **PURCHASE ORDERS:**

County reserves the right to cancel Purchase Orders within a reasonable period of time after issuance. Should a Purchase Order be canceled, the County agrees to reimburse the Contractor for actual and documentable costs incurred by the Contractor in response to the Purchase Order. The County will not reimburse the Contractor for any costs incurred after receipt of County notice of cancellation, or for lost profits, shipment of product prior to issuance of Purchase Order, etc.

4.27 **AUDIT DISALLOWANCES:**

If at any time it is determined by the County that a cost for which payment has been made is a disallowed cost, the County shall notify the Contractor in writing of the disallowance. The course of action to address the disallowance shall be at sole discretion of the County, and may include either an adjustment to future invoices, request for credit, request for a check or a deduction from current invoices submitted by the Contractor equal to the amount of the disallowance, or to require reimbursement forthwith of the disallowed amount by the Contractor by issuing a check payable to Maricopa County.

4.28 **STRICT COMPLIANCE:**

Acceptance by County of a performance that is not in strict compliance with the terms of the Contract shall not be deemed to be a waiver of strict compliance with respect to all other terms of the Contract.

4.29 **SEVERABILITY:**

The removal, in whole or in part, of any provision of this Contract shall not void or affect the validity of any other provision of this Contract.

4.30 **ISRAEL BOYCOTT:**

By submitting this proposal the Contractor certifies that they are in compliance with Article 9, Arizona Revised Statutes Section 35-393 *et seq.*

~~CONFIDENTIALITY:~~

~~In the course of the solicitation process, the County may disclose information that is proprietary or confidential. By submitting a bid to the solicitation, the offeror agrees that, except as necessary to prepare a response to this solicitation, neither it nor its agents or employees will communicate, divulge or disseminate to any third party persons or entities, any information that is disclosed to it by the County during the course of these discussions without the express written authorization of the County. If the offeror does disclose County proprietary or confidential information to a third party in preparing a response to this solicitation, it shall require the third party to acknowledge and comply with this provision.~~

4.31 **CONFIDENTIALITY INFORMATION:**
Any information obtained in the course of performing this Contract may include information that is proprietary or confidential to the County. This provision establishes the Contractor's obligation regarding such information.

The Contractor shall establish and maintain procedures and controls that are adequate to assure that no information contained in its records and/or obtained from the County or from others in carrying out its functions (services) under the Contract shall be used by or disclosed by it, its agents, officers, or employees, except as required to efficiently perform duties under the Contract. The Contractor's procedures and controls at a minimum must be the same procedures and controls it uses to protect its own proprietary or confidential information. If, at any time during the duration of the Contract, the County determines that the procedures and controls in place are not adequate, the Contractor shall institute any new and/or additional measures requested by the County within fifteen (15) calendar days of the written request to do so.

Any requests to the Contractor for County proprietary or confidential information s shall be referred to the County for review and approval, prior to any dissemination.

4.32 **INTEGRATION:**

This Contract represents the entire and integrated agreement between the parties and supersedes all prior negotiations, proposals, communications, understandings, representations, or agreements, whether oral or written, express or implied.

4.33 **GOVERNING LAW:**

This Contract shall be governed by the laws of the state of Arizona. Venue for any actions or lawsuits involving this Contract will be in Maricopa County Superior Court or in the United States District Court for the District of Arizona, sitting in Phoenix, Arizona.

4.34 **ORDER LEAD-TIME NOTIFICATION:**

Contractors submitting bids shall advise the County of lead-time(s) for the required items specified in this solicitation at the time of bid submission. Notification of any changes to lead time (learned after submission of bid) shall also be the Contractor's responsibility. The Contractor shall also notify all County Representatives included on Purchase Orders of lead-time information. If the item(s) become no longer available, Contractor shall notify County of the last available ordering date for the item(s), and may provide County with alternative item(s) that the County may elect to purchase at its option. If the alternative item(s) do not meet the County's requirements, County may terminate this Contract for Convenience per Section 4.8.

4.35 **INSURANCE:**

4.35.1 **Certificates of Insurance:**

Prior to Contract award, Contractor shall furnish the County with valid and complete certificates of insurance, or formal endorsements as required by the Contract in the form provided by the County, issued by Contractor's insurer(s), as evidence that policies providing the required coverage, conditions and limits required by this Contract are in full force and effect. Such certificates shall identify this contract number and title.

In the event any insurance policy(ies) required by this Contract is(are) written on a "claims made" basis, coverage shall extend for two (2) years past completion and acceptance of Contractor's work or services and as evidenced by annual Certificates of Insurance.

If a policy does expire during the life of the Contract, a renewal certificate must be sent to County fifteen (15) calendar days prior to the expiration date.

4.35.2 **Cancellation and Expiration Notice:**

Applicable to all insurance policies required within the Insurance Requirements of this Contract, Contractor's insurance shall not be permitted to expire, be suspended, be canceled, or be materially changed for any reason without thirty (30) calendar days prior written notice to Maricopa County. Contractor must provide to Maricopa County, within two (2) business days of receipt, if they receive notice of a policy that has been or will be suspended, canceled, materially changed for any reason, has expired, or will be expiring. Such notice shall be sent directly to Maricopa County Office of Procurement Services and shall be mailed or hand delivered to 320 West Lincoln Street, Phoenix, AZ 85003, or emailed to Procurement Officer noted in solicitation.

4.36 **FORCE MAJEURE:**

4.36.1 **Neither party shall be liable for failure of performance, nor incur any liability to the other party on account of any loss or damage resulting from any delay or failure to perform all or any part of this Contract if such delay or failure is caused by events, occurrences, or causes beyond the reasonable control and without negligence of the parties. Such events, occurrences, or causes will include Acts of God/Nature (including fire, flood, earthquake, storm, hurricane or other natural disaster), war, invasion, act of foreign enemies, hostilities (whether war is declared or not), civil war, riots, rebellion, revolution, insurrection, military or usurped power or confiscation, terrorist activities, nationalization, government sanction, lockout, blockage, embargo, labor dispute, strike, interruption or failure of electricity or telecommunication service.**

4.36.2 **Each party, as applicable, shall give the other party notice of its inability to perform and particulars in reasonable detail of the cause of the inability. Each party must use best efforts to remedy the situation and remove, as soon as practicable, the cause of its inability to perform or comply.**

4.36.3 **The party asserting *Force Majeure* as a cause for non-performance shall have the burden of proving that reasonable steps were taken to minimize delay or damages caused by foreseeable events, that all non-excused obligations were substantially fulfilled, and that the other party was timely notified of the likelihood or actual occurrence which would justify such an assertion, so that other prudent precautions could be contemplated.**

4.37 **UNIFORM ADMINISTRATIVE REQUIREMENTS:**

By entering into this Contract, the Contractor agrees to comply with all applicable provisions of Title 2, Subtitle A, Chapter II, PART 200—UNIFORM ADMINISTRATIVE REQUIREMENTS, COST PRINCIPLES, AND AUDIT REQUIREMENTS FOR FEDERAL AWARDS contained in Title 2 C.F.R. § 200 *et seq.*

SERIAL 14105-C TRAFFIC SIGN POSTS, HARDWARE AND ACCESSORIES

DATE OF LAST REVISION: January 17, 2019 CONTRACT END DATE: January 31, 2020

CONTRACT PERIOD THROUGH JANUARY 31, ~~2017~~ ~~2018~~ ~~2019~~ 2020

TO: All Departments

FROM: Office of Procurement Services

SUBJECT: Contract for **TRAFFIC SIGN POSTS, HARDWARE AND ACCESSORIES**

Attached to this letter is published an effective purchasing contract for products and/or services to be supplied to Maricopa County activities as awarded by Maricopa County on **January 8, 2015.**

All purchases of products and/or services listed on the attached pages of this letter are to be obtained from the vendor holding the contract. Individuals are responsible to the vendor for purchases made outside of contracts. The contract period is indicated above.

Kevin Tyne

Kevin Tyne, Chief Procurement Officer
Office of Procurement Services

BG/am
Attach

Copy to: Office of Procurement Services
Suzi Williams, MCDOT

(Please remove Serial 08103-C from your contract notebooks)

~~XCESSORIES SQUARED SORTHWEST, INC., 2665 S. LA LUNA, GOODYEAR, AZ 85338~~

~~COMPANY NAME:~~	~~Xcessories Squared Southwest, Inc.~~
~~DOING BUSINESS AS (DBA) NAME:~~	
~~MAILING ADDRESS:~~	~~2665 S. La Luna Goodyear, AZ 85338~~
~~REMIT TO ADDRESS:~~	~~2665 S. La Luna Goodyear, AZ 85338~~
~~TELEPHONE NUMBER:~~	~~623-882-1153~~
~~FACSIMILE NUMBER:~~	~~623-882-1174~~
~~WEB SITE:~~	~~www.x-sqrd.com~~
~~REPRESENTATIVE NAME:~~	~~Larry Gill~~
~~REPRESENTATIVE TELEPHONE NUMBER:~~	~~602-738-3056~~
~~REPRESENTATIVE E-MAIL:~~	~~lgill@x-sqrd.com~~

-

-

	~~YES~~	~~NO~~	~~REBATE~~
~~WILL ALLOW OTHER GOVERNMENTAL ENTITIES TO PURCHASE FROM THIS CONTRACT:~~	☑	☐	~~0~~
~~WILL ACCEPT PROCUREMENT CARD FOR PAYMENT:~~	☑	☐	

~~FUEL COMPRISES (if section for fuel price adjustment is located in the solicitation document)~~ ~~18% OF TOTAL BID AMOUNT~~

~~PAYMENT TERMS:~~

☑ ~~NET 30 DAYS~~

~~***1ST CALL***~~

~~Title~~	~~Unit Price~~	~~UofM~~	~~Description~~
~~Square Tube Sign Post - 10'~~	~~$23.70~~	~~each~~	~~Square Tube Sign Post, Perforated 2" x 2" x 10' — Estimated Annual Usage = 800~~
~~Square Tube Sign Post - 12'~~	~~$28.60~~	~~each~~	~~Square Tube Sign Post, perforated, 2" x 2" x 12' - Estimated Annual Usage = 700~~
~~Square Tube Sleeve~~	~~$3.35~~	~~each~~	~~Square Tube Sleeve perforated, 2 1/2" x 2 1/2" x 12', per Exhibit 2 Estimated Annual Usage = 25~~
~~Square Tube Anchor - 18"~~	~~$4.50~~	~~each~~	~~Square Tube Anchor, 2 1/4" x 2 1/4" x 18", per Exhibit 3 Estimated Annual Usage = 300~~
~~Square Tube Anchor - 24"~~	~~$5.95~~	~~each~~	~~Square Tube Anchor, 2 1/4" x 2 1/4" x 24", per Exhibit 3 Estimated Annual Usage = 1000~~
~~Polypropylene Sleeve~~	~~$5.95~~	~~each~~	~~Polypropylene Sleeve, Federal Yellow, 24" Long, 1/16" Wall Thickness Estimated Annual Usage = 2000~~
~~Square Tube Sign Post - 10' (14 Gauge)~~	~~$18.40~~	~~each~~	~~Square Tube Sign Post, perforated 2" x 2" x 10' (14 Gauge) Estimated Annual Usage = 3000~~

~~XCESSORIES SQUARED SORTHWEST, INC., 2665 S. LA LUNA, GOODYEAR, AZ 85338~~

~~Square Tube Sign Post - 12' (14 Gauge)~~	~~$22.25~~	~~each~~	~~Square Tube Sign Post, perforated 2" x 2" x 12' (14 Gauge) Estimated Annual Usage = 2000~~
~~Square Tube Sign Post - 14' (14 Gauge)~~	~~$25.70~~	~~each~~	~~Square Tube Sign Post, perforated 2" x 2" x 14' (14 Gauge) Estimated Annual Usage = 2000~~
~~Square Tube Anchor~~	~~$6.85~~	~~each~~	~~Square Tube Anchor 2-1/4" x 2-1/4" x 30" Estimated Annual Usage = 3000~~
~~Square Tube Sleeve~~	~~$4.70~~	~~each~~	~~Square Tube Sleeve 2-1/2" x 2-1/2" x 18" Estimated Annual Usage = 3000~~
~~Green U-Channel Post 5' - 1.12lb~~	~~$4.25~~	~~each~~	~~Estimated Annual Usage = 2000~~
~~Green U-Channel Post 6' - 1.12lb~~	~~$5.20~~	~~each~~	~~Estimated Annual Usage = 2000~~
~~Green U-Channel Post 5' - 2lb~~	~~$7.25~~	~~each~~	~~Estimated Annual Usage = 2000~~
~~Green U-Channel Post 7' - 2lb~~	~~$10.15~~	~~each~~	~~Estimated Annual Usage = 2000~~
~~Green U-Channel Post 7.5' - 2lb~~	~~$10.85~~	~~each~~	~~Estimated Annual Usage = 2000~~
~~Green U-Channel Post 8' - 2lb~~	~~$11.55~~	~~each~~	~~Estimated Annual Usage = 2000~~
~~Galvanized U-Channel Post 6' - 2lb~~	~~$11.15~~	~~each~~	~~Estimated Annual Usage = 2000~~
~~Galvanized U-Channel Post - 7.5' - 2lb~~	~~$13.90~~	~~each~~	~~Estimated Annual Usage = 2000~~
~~Galvanized U-Channel Post 8' - 2lb~~	~~$14.85~~	~~each~~	~~Estimated Annual Usage = 2000~~
~~Sign Bracket, Box Blade Post Cap~~	~~$5.50~~	~~each~~	~~Sign Bracket, Box Blade Post Cap for Square Post 2" # BBCAP200SQ Estimated Annual Usage = 500~~
~~Sign Bracket, Separator for Box Blade with Holes~~	~~$1.75~~	~~each~~	~~Sign Bracket, Separator for Box Blade with Holes, # SEP w/Holes Estimated Annual Usage = 500~~
~~Sign Bracket, Separator for Box Blade without Holes~~	~~$1.75~~	~~each~~	~~Sign Bracket, Separator for Box Blade without Holes, # SEP w/o Holes Estimated Annual Usage = 500~~
~~Sign Bracket, Center Rod for above Box Blade Post Cap - 19-1/2"~~	~~$7.50~~	~~each~~	~~Sign Bracket, Center Rod for above Box Blade Post Cap, 19-1/2" # Center Rod / All Thread Estimated Annual Usage = 400~~
~~Sign Bracket, Center Rod for above Box Blade Post Cap - 26"~~	~~$10.75~~	~~each~~	~~Sign Bracket, Center Rod for above Box Blade Post Cap, 26" # Center Rod / All Thread Estimated Annual Usage = 100~~
~~Sign Bracket, Dome Nut~~	~~$1.40~~	~~each~~	~~Sign Bracket, Dome Nut for above Box Blade Post Cap, # Dome / Acorn Nut Estimated Annual Usage = 500~~
~~Sign Bracket, Cantilever Arm~~	~~$7.75~~	~~each~~	~~Estimated Annual Usage = 100~~
~~Sign Bracket, Cantilever Extension~~	~~$7.55~~	~~each~~	~~Estimated Annual Usage = 100~~
~~Vis-Z-Shield, Post Reflector~~	~~$31.00~~	~~each~~	~~Estimated Annual Usage = 100~~

~~XCESSORIES SQUARED SORTHWEST, INC., 2665 S. LA LUNA, GOODYEAR, AZ 85338~~

~~PRICING SHEET: NIGP CODES 55085, 80130, 80187~~

~~Terms: NET 30~~

~~Vendor Number: 2011002625-0 VC0000002826~~

~~Certificates of Insurance Required~~

~~Contract Period: To cover the period ending January 31, 2017 2018.~~

REMOVED FROM CONTRACT EFF. FEBRUARY 01, 2018.

SERIAL 14105-C

ZUMAR INDUSTRIES, INC., 7833 N 106TH AVE., GLENDALE, ARIZONA 85307

COMPANY NAME:	**Zumar Industries of Arizona**
DOING BUSINESS AS (DBA) NAME:	**Zumar Industries, Inc.**
MAILING ADDRESS:	**7833 N 106th Ave., Glendale, Arizona 85307**
REMIT TO ADDRESS:	**7833 N 106th Ave., Glendale, Arizona 85307**
TELEPHONE NUMBER:	**623-931-7446**
FACSIMILE NUMBER:	**623-877-7446**
WEB SITE:	**zumar.com**
REPRESENTATIVE NAME:	**Jody Case**
REPRESENTATIVE TELEPHONE NUMBER:	**623-760-7041**
REPRESENTATIVE E-MAIL:	**jody@zumar.com**

	YES	NO	REBATE
WILL ALLOW OTHER GOVERNMENTAL ENTITIES TO PURCHASE FROM THIS CONTRACT:	☑	☐	
WILL ACCEPT PROCUREMENT CARD FOR PAYMENT:	☑	☐	

FUEL COMPRISES (if section for fuel price adjustment is located in the solicitation document) % OF TOTAL BID AMOUNT

PAYMENT TERMS:

☑ NET 30 DAYS

~~***2ND CALL***~~

Title	Unit Price	UofM	Description
Square Tube Sign Post - 10'	$25.70	each	Square Tube Sign Post, Perforated 2" x 2" x 10' Estimated Annual Usage = 800
Square Tube Sign Post - 12'	$28.80	each	Square Tube Sign Post, perforated, 2" x 2" x 12' Estimated Annual Usage = 700
Square Tube Sleeve	$3.07	each	Square Tube Sleeve perforated, 2 1/2" x 2 1/2" x 12", per Exhibit 2 Estimated Annual Usage = 25
Square Tube Anchor - 18"	$5.50	each	Square Tube Anchor, 2 1/4" x 2 1/4" x 18", per Exhibit 3 Estimated Annual Usage = 300
Square Tube Anchor - 24"	$6.40	each	Square Tube Anchor, 2 1/4" x 2 1/4" x 24", per Exhibit 3 Estimated Annual Usage = 1000
Polypropylene Sleeve	$6.35	each	Polypropylene Sleeve, Federal Yellow, 24" Long, 1/16" Wall Thickness Estimated Annual Usage = 2000
Square Tube Sign Post - 10' (14 Gauge)	$19.20	each	Square Tube Sign Post, perforated 2" x 2" x 10' (14 Gauge) Estimated Annual Usage = 3000
Square Tube Sign Post - 12' (14 Gauge)	$23.05	each	Square Tube Sign Post, perforated 2" x 2" x 12' (14 Gauge) Estimated Annual Usage = 2000

ZUMAR INDUSTRIES, INC.

Square Tube Sign Post - 14' (14 Gauge)	$31.20	each	Square Tube Sign Post, perforated 2" x 2" x 14' (14 Gauge) Estimated Annual Usage = 2000
Square Tube Anchor	$7.33	each	Square Tube Anchor 2-1/4" x 2-1/4" x 30" Estimated Annual Usage = 3000
Square Tube Sleeve	$4.95	each	Square Tube Sleeve 2-1/2" x 2-1/2" x 18" Estimated Annual Usage = 3000
Green U-Channel Post 5' - 1.12lb	$6.61	each	Estimated Annual Usage = 2000
Green U-Channel Post 6' - 1.12lb	$7.81	each	Estimated Annual Usage = 2000
Green U-Channel Post 5' - 2lb	$10.29	each	Estimated Annual Usage = 2000
Green U-Channel Post 7' - 2lb	$14.87	each	Estimated Annual Usage = 2000
Green U-Channel Post 7.5' - 2lb	$16.32	each	Estimated Annual Usage = 2000
Green U-Channel Post 8' - 2lb	$17.37	each	Estimated Annual Usage = 2000
Galvanized U-Channel Post 6' - 2lb	$14.91	each	Estimated Annual Usage = 2000
Galvanized U-Channel Post - 7.5' - 2lb	$16.32	each	Estimated Annual Usage = 2000
Galvanized U-Channel Post 8' - 2lb	$19.87	each	Estimated Annual Usage = 2000
Sign Bracket, Box Blade Post Cap	$6.50	each	Sign Bracket, Box Blade Post Cap for Square Post 2" # BBCAP200SQ Estimated Annual Usage = 500
Sign Bracket, Separator for Box Blade with Holes	$1.85	each	Sign Bracket, Separator for Box Blade with Holes, # SEP w/Holes Estimated Annual Usage = 500
Sign Bracket, Separator for Box Blade without Holes	$1.85	each	Sign Bracket, Separator for Box Blade without Holes, # SEP w/o Holes Estimated Annual Usage = 500
Sign Bracket, Center Rod for above Box Blade Post Cap - 19-1/2"	$5.85	each	Sign Bracket, Center Rod for above Box Blade Post Cap, 19-1/2" # Center Rod / All Thread Estimated Annual Usage = 400
Sign Bracket, Center Rod for above Box Blade Post Cap - 26"	$6.50	each	Sign Bracket, Center Rod for above Box Blade Post Cap, 26" # Center Rod / All Thread Estimated Annual Usage = 100
Sign Bracket, Dome Nut	$0.85	each	Sign Bracket, Dome Nut for above Box Blade Post Cap, # Dome / Acorn Nut Estimated Annual Usage = 500
Sign Bracket, Cantilever Arm	$7.50	each	Estimated Annual Usage = 500
Sign Bracket, Cantilever Extension	$7.50	each	Estimated Annual Usage = 100
Vis-Z-Shield, Post Reflector	$27.00	each	Estimated Annual Usage = 100

****EFFECTIVE 10/06/16****

ZUMAR PART #	DESCRIPTION	UNIT PRICE	UOFM
808850F2	**6" Street Sign Post Cap**	**$6.00**	**EA**

SERIAL 14105-C

ZUMAR INDUSTRIES, INC.

ZUMAR PART #	DESCRIPTION	UNIT PRICE	UOFM
808850F90X	6" Street Sign Separator	$6.40	EA
909FPX	6" Dead End Plate	$8.35	EA
808FUC90	5-1/2" Street Sign Post Cap U Channel 90	$4.65	EA
808FUC180	5-1/2" Street Sign Post Cap U Channel 180	$4.65	EA
Z12RDSQ200F	12" Street Sign Post Cap	$12.50	EA
812F90X	12" Street Sign Post Separator	$12.50	EA
Z18RDSQ200F	18" Street Sign Post Cap	$35.00	EA
Z1890F	18" Street Sign Post Separator	$35.00	EA
Z24RDSQ200F	24" Street Sign Post Cap	$45.00	EA
Z2490F	24" Street Sign Post Separator	$45.00	EA
1010	14-1/2" Cantilever Wing Bracket	$8.00	EA
240EWB000	24" Cantilever Wing Bracket	$15.00	EA
300EWB000	30" Cantilever Wing Bracket	$35.00	EA
360EWB000	36" Cantilever Wing Bracket	$45.00	EA

EFFECTIVE 1/25/18

ITEM #	DESCRIPTION	UNIT PRICE	UOFM
PT1121012	Telespar 1-1/2 x 12ga x10' (17.45# ea)	$25.50	EA
PT1341012	Telespar 1-3/4 x 12ga x10' (20.94# ea)	$23.25	EA
PT1341112	Telespar 1-3/4 x 12ga x11'	$25.58	EA
PT1341212	Telespar 1-3/4 x 12ga x12'	$27.90	EA
PT1121212	1.5x1.5x12'x12 gauge Perforated Post	$30.12	EA
C254	1/2" SS Band-It Buckles	$0.38	EA
C204	1/2" x 100' .030 SS Band-it Banding	$57.26	EA
HDA18R	2.25"x18" 2 Hole Solid Anchor	$6.00	EA
HDA336	3"x 3"x36" 7 ga Heavy Duty Anchor	$24.50	EA
TL3806	3/8" Steel Drive Rivet	$0.70	EA
Z5CPF	90 DEG x-piece for 6" Flat Bolt Thru	$4.90	EA
Z12CPF	90 Degree X-Piece for flat blade (12")	$9.95	EA
D001	Band-It SS Straight Leg Brkt w/bolt	$2.95	EA
909Maricopa	Maricopa Spec 850 Bottom /909 Top 2" SQ Flat	$9.50	EA
909FPX	Paralell X-Piece	$7.25	EA

SERIAL 14105-C

ZUMAR INDUSTRIES, INC

PRICING SHEET:	NIGP CODES 55085, 80130, 80187
Terms:	NET 30
Vendor Number:	~~2011002220 0~~ **VC0000009440**
Certificates of Insurance	Required
Contract Period:	To cover the period ending **January 31,** ~~2017~~ ~~2018~~ ~~2019~~ **2020.**

TRAFFIC SIGN POSTS, HARDWARE AND ACCESSORIES

1.0 INTENT:

The intent of this Invitation for Bids is to establish a price agreement for traffic sign posts **hardware and accessories**. Any material ordered through this contract shall be delivered to the Maricopa County Department of Transportation Procurement and Distribution Center, 2222 S. 27th Ave., Phoenix, Arizona 85009, as covered by a purchase order only.

Other governmental entities under agreement with the County may have access to services provided hereunder (see also Sections 2.22 and 2.23, below).

The County reserves the right to add additional contractors, at the County's sole discretion, in cases where the currently listed contractors are of an insufficient number or skill-set to satisfy the County's needs or to ensure adequate competition on any project or task order work.

2.0 SPECIFICATIONS:

2.1 Material: Tubing with plain finish is roll formed from 12 gauge hot rolled steel, with ASTM A1011/A1011M Grade 50, pickled and oiled galvanized finish, rolled formed from 12 gauge cold rolled steel, galvanized material per ASTM. A653/A653M-93, Grade 50.

2.2 Finished Galvanized: Material (cold rolled steel) is to be finished with hot dipped galvanized coating conforming to ASTM A653/A653M, Grade-90. Zinc Coating shall form a bond with the steel so as not to be affected by subsequent forming operations. Corner weld is to be protected against corrosion by "sacrificial action" when zinc is present on intimate adjacent area. Post must be galvanized both inside and out for the entire length of the post, **no exceptions.**

2.3 Shape: The cross section of the post shall be square tubing formed of 12 gauge steel, carefully formed in size and, if necessary, shall be welded in such a manner that weld or flash shall not interfere with telescoping. Weld flash on corner welded square tubing shall permit a 9/64" radius gauge to be placed in the corner. **Corner weld is the only type of weld acceptable**. No surface weld will be allowed except for anchor and sleeve welded together.

2.4 Perforations: Hole diameter shall be 7/16" plus or minus 1/64"on 1" centers on all four sides the entire length of the post. Holes shall be on the centerline of each side in true alignment and opposite to each other. All material cuts must be centered between hole patterns and at a 90 degree angle to the length of the material. **No punch out or insert type hole patterns shall be considered**.

2.4.1 Yield/Tensile Properties: 60,000 PSI Minimum Yield / 65,000 Minimum Tensile.

2.4.2 Tolerances:

Tolerances on outside sizes:

Outside Tolerance at Nominal Outside Dimensions	all sides at corners
2" x 2"	Plus or minus .008"
2-1/4" x 2-1/4"	Plus or minus .010"

Note: Measurements for outside dimensions shall be made at least 2" from end of tube.

2.4.3 Wall Thickness Tolerance: Permissible variation in wall thickness is plus .011" minus .005".

2.4.4 Convexity and Concavity: Measured in the center of the flat side tolerance is plus or minus .010" applied to the specific size determined at the center.

2.4.5 Squareness of Sides and Twists:

Nominal Outside Dimensions	Twist Permissible Squareness Tolerance	N 3' Length
2" x 2"	Plus or Minus .012"	.062"
2-1/4" x 2-1/4"	Plus or Minus .014	.062"

Note: A sample shall be considered to fail if its sides are not 90 degrees to each other by the tolerance listed above.

2.4.6 Straightness to Tolerance: Permissible variation in straightness is 3/16" per 10'.

2.4.7 Corner Radius: Standard outside corner radius shall be 5/32" (0.15625") plus or minus 1/64" (0.015625").

2.4.8 Length: The length of each post shall be specified and have permissible length tolerance of plus or minus 1/8" (0.125")

2.4.9 Cross Section:

Posts shall be of one or more of the following sizes:

Size	Gauge	Weight per Foot, Pounds
2" X 2"	12	2.416
2-1/4" X 2-1/4"	12	2.773

2.4.10 Quality Assurance: The manufacturer shall certify in writing with the bid that the materials offered have been tested in accordance with a certified quality assurance program and indicate the product's yield strength, PSI and their product's tensile strength, PSI and that the manufacturer has supervised all the elements of the fabrication necessary for the manufacturer of the telescopic perforated square tubing and that all materials have proven to be satisfactory for the use intended by these contract documents. ***This requirement is mandatory.***

2.4.11 Telescoping Properties: The finished post shall be straight and shall have a smooth uniform finish. It shall be possible to telescope all consecutive sizes of square tubes freely and for not less than ten feet of their length without the necessity of matching any particular face to any other face. All holes and ends shall be cut square.

2.5 USAGE REPORT:

The Contractor shall furnish the County a quarterly usage report delineating the acquisition activity governed by the Contract. The format of the report shall be approved by the County and shall disclose the quantity and dollar value of each contract item by individual unit.

2.6 DELIVERY AND INSTALLATION:

2.6.1 Delivery shall be F.O.B. Destination Freight Prepaid within ~~forty-five (45)~~ **ten (10)** days of receipt of Using Agency purchase order, to any delivery location within Maricopa County.

2.7 EXPEDITED DELIVERY:

2.7.1 If the Using Agency determines that rush shipping or other alternate shipping is required, it shall notify the Contractor. The Contractor shall determine any additional costs associated with such delivery terms and communicate that cost to the Using Agency.

2.7.2 The Using Agency shall not advise the Contractor to proceed with an expedited shipment until acceptable terms are agreed upon and a purchase order is issued. Upon agreeing to the additional costs, the Using Agency shall advise the Contractor to proceed.

2.7.3 Upon receipt of material(s) and invoicing, the Using Agency shall ensure that any additional charges are in compliance with and do not exceed agreed to costs. The Using Agency shall retain all documents related to these costs within the agency purchase file.

2.8 SHIPPING DOCUMENTS:

A packing list or other suitable shipping document shall accompany each shipment and shall include the following:

2.8.1 Contract Serial number.

2.8.2 Contractor's name and address.

2.8.3 Using Agency name and address.

2.8.4 Using Agency purchase order number.

2.8.5 A description of product(s) shipped, including item number(s), quantity (ies), number of containers and package number(s), as applicable.

2.9 SHIPPING TERMS:

Bid price(s) and terms shall be F.O.B. Destination at:
Phoenix, Arizona 85003

2.10 OPERATING MANUALS:

Upon delivery, Contractor shall provide comprehensive operational manuals, service manuals and schematic diagrams, if required by the Using Agency.

2.11 INSTALLATION:

The Contractor's price shall include delivery and set-up to be in complete operating condition.

2.12 ACCEPTANCE:

Upon delivery and/or successful installation, the material(s) shall be deemed accepted and the warranty period shall begin. All documentation shall be completed prior to final acceptance.

2.13 STOCK:

The Contractor shall be expected to stock locally, sufficient quantities as may be necessary to meet the County's needs.

2.14 WAREHOUSE/DISTRIBUTION CENTER:

The Contractor shall have access to a local warehouse/distribution center(s) within the Phoenix, Arizona metropolitan area capable of providing the material(s) listed herein at the time of bid submission.

2.15 DISCONTINUED MATERIALS:

2.15.1 In the event that a manufacturer discontinues materials, the County may allow the Contractor to provide a substitute for the discontinued item or may cancel the Contract. If the Contractor requests permission to substitute a new material, the Contractor shall provide the following to the County:

2.15.1.1 Documentation from the manufacturer that the material has been discontinued.

2.15.1.2 Documentation that names the replacement material.

2.15.1.3 Documentation that provides clear and convincing evidence that the replacement material meets or exceeds all specifications required by the original solicitation.

2.15.1.4 Documentation that provides clear and convincing evidence that the replacement material will be compatible with all the functions or uses of the discontinued material.

2.15.1.5 Documentation confirming that the price for the replacement is the same as or less than the discontinued material.

2.15.2 Material discontinuance applies only to those materials specifically listed on any resultant contract. This will not apply to catalog items not specifically listed on any resultant contract.

2.16 WARRANTY:

2.16.1 All items furnished under this Contract shall conform to the requirements of this Contract and shall be free from defects in design, materials and workmanship.

2.16.2 The warranty period for workmanship and materials shall be for an initial period of twelve (12) months and commence upon acceptance by County.

2.16.2.1 The Contractor shall indicate on the Price Sheet the duration of the warranty and any applicable limitations or conditions which may apply.

2.16.2.2 The Contractor agrees that he will, at his own expense, provide all labor and parts required to remove, repair or replace, and reinstall any such defective workmanship and/or materials which becomes or is found to be defective during the term of this warranty. The Contractor shall guarantee the equipment to be supplied complies with all applicable regulations.

2.17 BRAND NAME:

The County reserves the right to request samples to determine quality and acceptability of materials bid by Contractor. In some cases, brand names have been listed in order to define the desired quality and are not intended to be restrictive or to limit competition. Materials substantially equivalent to those designated shall qualify for consideration.

2.18 ORDER CUTOFF INFORMATION:

Contractors submitting bids shall advise the County of all known order cutoff dates for the equipment / product(s) specified in this solicitation at the time of bid submission. Notification of any subsequent cutoff date(s) (learned after submission of bid) shall also be the Contractor's responsibility. The Contractor shall advise the County of subsequent cutoff dates by notifying the Procurement Officer, in writing, of the new information.

2.19 INVOICES AND PAYMENTS:

2.19.1 The Contractor shall submit one (1) legible copy of their detailed invoice before payment(s) can be made. At a minimum, the invoice must provide the following information:

- Company name, address and contact
- County bill-to name and contact information
- Contract Serial Number
- County purchase order number
- Invoice number and date
- Payment terms
- Date of service or delivery
- Quantity (number of days or weeks)
- Contract Item number(s)
- Description of Purchase (product or services)
- Pricing per unit of purchase
- Freight (if applicable)
- Extended price
- Mileage w/rate (if applicable)
- Arrival and completion time (if applicable)
- Total Amount Due

2.19.2 Problems regarding billing or invoicing shall be directed to the using agency as listed on the Purchase Order.

2.19.3 Payment shall be made to the Contractor by Accounts Payable through the Maricopa County Vendor Express Payment Program. This is an Electronic Funds Transfer (EFT) process. After Contract Award the Contractor shall complete the Vendor Registration Form located on the County Department of Finance Vendor Registration Web Site (**http://www.maricopa.gov/Finance/Vendors.aspx**).

2.19.4 EFT payments to the routing and account numbers designated by the Contractor will include the details on the specific invoices that the payment covers. The Contractor is required to discuss remittance delivery capabilities with their designated financial institution for access to those details.

2.20 TAX **(COMMODITIES):**

~~Tax shall not be levied against labor. Sales/use tax will be determined by County. Tax will not be used in determining low price.~~

Tax shall not be invoiced against Contractor's labor. Sales/use tax will be determined by County. Tax will not be used in determining low price.

2.21 FUEL COST PRICE ADJUSTMENT:

2.21.1 This provision provides for limited increased or decreased costs of motor fuels (fuels) used to perform services under this Contract. This provision does not apply to burner fuel (i.e. propane, natural gas, fuel oil, used motor oil). It applies to motor fuel only. Fuel cost adjustments may be either positive or negative. A positive fuel cost adjustment will result in an increase in payments to Contractor while a negative fuel cost adjustment will result in a decrease in payments to Contractor.

2.21.2 This provision is intended to minimize risk to both parties to this Contract due to fuel cost fluctuations that may occur during the term of this Contract. This provision is not designed to estimate actual quantities of fuel used in providing services under this

Contract, but to provide a reasonable basis for calculating a fuel cost adjustment based on average conditions.

2.21.3 Application of this provision will come into effect upon Contractor submittal of a fuel cost adjustment request. A request may be submitted only when the increased cost of fuel, established as a percentage of total contract price (base fuel cost) upon award of this Contract, exceeds ten (10%) percent of the base fuel cost. The Contractor may request a fuel surcharge no more than four (4) times annually, during the month(s) of March, June, September and December. The request must be submitted no later than the tenth (10th) of the month. Any surcharge shall be effective the first of the following month after receipt and approval. The date of County approval of a fuel cost adjustment request shall become the base date for any future Contractor adjustment requests.

2.21.4 Contractor shall include, as part of its price bid, the percentage of total contract price fuel represents (e.g., fuel cost equals 10% of Contractor cost) (see also, Attachment A, Vendor Information). This percentage will represent and establish the base fuel cost for this Contract. The base fuel cost shall be established as the due date for submission of proposals for this Contract. All subsequent fuel cost adjustments shall be based upon the date the County approves a Contractor's request for fuel cost adjustment (e.g. fuel cost adjustment approved by County on January 1, 2006, January 1, 2006 becomes base date for any next Contractor request for adjustment).

2.21.5 Fuel Cost Application Requirement. The Contractor must provide documentation including type of motor fuel and fuel invoices with price of the fuel used in providing services under this Contract, from the month bids were due and the month of the cost adjustment request, with any fuel cost adjustment application. The fuel cost adjustment application must be completed with all applicable data, and signed by the Contractor. Any cost adjustment will be calculated by the County by using the bureau of Labor Statistics, Producer Price Index for Gasoline – WPU0571 and #2 Diesel Fuel – WPO57303 (http://data.bls.gov/cgi-bin/surveymost?wp).

2.21.6 The fuel surcharge shall be based on the current quarterly index of the West Coast (PADD5) Diesel (On-Highway)-All Types or Reformulated Areas Gasoline compared to the previous quarterly index period as reported on the Energy Information Administration (EIA) website: http://www.eia.doe.gov/

2.21.7 The computation of the fuel surcharge amount shall be determined as follows:

2.21.7.1 The fuel cost component from Attachment A (vendor information) of the Contract with Maricopa County, multiplied by the percent of change indicated by the EIA report from the previous index period.

2.21.7.2 Upon agreement by the County to the surcharge, the County shall issue written approval of the change prior to any adjusted invoicing submitted for payment.

2.21.7.3 The surcharge shall be added as a separate line item to the invoice.

2.22 STRATEGIC ALLIANCE for VOLUME EXPENDITURES ($AVE)

The County is a member of the $AVE cooperative purchasing group. $AVE includes the State of Arizona, many Phoenix metropolitan area municipalities, and many K-12 unified school districts. Under the $AVE Cooperative Purchasing Agreement, and with the concurrence of the successful Respondent under this solicitation, a member of $AVE may access a contract resulting from a solicitation issued by the County. If you **do not** want to grant such access to a member of $AVE, **please state so** in your proposal. In the absence of a statement to the contrary, the County will assume that you do wish to grant access to any contract that may result from this Request for Proposal.

2.23 INTERGOVERNMENTAL COOPERATIVE PURCHASING AGREEMENTS (ICPA's)

County currently holds ICPA's with numerous governmental entities throughout the State of Arizona. These agreements allow those entities, with the approval of the Contractor, to purchase their requirements under the terms and conditions of the County Contract. Please indicate on Attachment A, your acceptance or rejection regarding such participation of other governmental entities. Your response will not be considered as an evaluation factor in awarding a contract.

3.0 SPECIAL TERMS & CONDITIONS:

3.1 CONTRACT TERM:

This Invitation for Bid is for awarding a firm, fixed-price purchasing contract to cover a term of two (2) years.

3.2 OPTION TO RENEW:

The County may, at its option and with the approval of the Contractor, renew the term of this Contract up to a maximum of four (4) additional years, (or at the County's sole discretion, extend the contract on a month to month basis for a maximum of six (6) months after expiration). The Contractor shall be notified in writing by the Office of Procurement Services of the County's intention to renew the contract term at least thirty (30) calendar days prior to the expiration of the original contract term.

3.3 PRICE ADJUSTMENTS:

Any requests for reasonable price adjustments must be submitted sixty (60) days prior to the Contract annual anniversary date. Requests for adjustment in cost of labor and/or materials must be supported by appropriate documentation. If County agrees to the adjusted price terms, County shall issue written approval of the change. The reasonableness of the request will be determined by comparing the request with the Consumer Price Index or by performing a market survey.

3.4 INDEMNIFICATION:

~~To the fullest extent permitted by law, Contractor shall defend, indemnify, and hold harmless County, its agents, representatives, officers, directors, officials, and employees from and against all claims, damages, losses and expenses, including, but not limited to, attorney fees, court costs, expert witness fees, and the cost of appellate proceedings, relating to, arising out of, or alleged to have resulted from the negligent acts, errors, omissions, mistakes or malfeasance relating to the performance of this Contract. Contractor's duty to defend, indemnify and hold harmless County, its agents, representatives, officers, directors, officials, and employees shall arise in connection with any claim, damage, loss or expense that is caused by any negligent acts, errors, omissions or mistakes in the performance of this Contract by the Contractor, as well as any person or entity for whose acts, errors, omissions, mistakes or malfeasance Contractor may be legally liable.~~

~~The amount and type of insurance coverage requirements set forth herein will in no way be construed as limiting the scope of the indemnity in this paragraph.~~

~~The scope of this indemnification does not extend to the sole negligence of County.~~

To the fullest extent permitted by law, and to the extent that claims, damages, losses or expenses are not covered and paid by insurance purchased by the Contractor, the Contractor shall defend indemnify and hold harmless the County (as Owner), its agents, representatives, agents, officers, directors, officials, and employees from and against all claims, damages, losses, and expenses (including, but not limited to attorneys' fees, court costs, expert witness fees, and the costs and attorneys' fees for appellate proceedings) arising out of, or alleged to have resulted from the negligent acts, errors, omissions, or mistakes relating to the performance of this Contract.

Contractor's duty to defend, indemnify, and hold harmless the County, its agents, representatives, agents, officers, directors, officials, and employees shall arise in connection with any claim, damage, loss, or expense that is attributable to bodily injury, sickness, disease, death or injury to, impairment of, or destruction of tangible property, including loss of use resulting there from, caused by negligent acts, errors, omissions, or mistakes in the performance of this Contract, but only to the extent caused by the negligent acts or omissions of the Contractor, a subcontractor, any one directly or indirectly employed by them, or anyone for whose acts they may be liable, regardless of whether or not such claim, damage, loss, or expense is caused in part by a party indemnified hereunder.

The amount and type of insurance coverage requirements set forth herein will in no way be construed as limiting the scope of the indemnity in this paragraph.

The scope of this indemnification does not extend to the sole negligence of County.

3.5 INSURANCE:

3.5.1 Contractor, at Contractor's own expense, shall purchase and maintain the herein stipulated minimum insurance from a company or companies duly licensed by the State of Arizona and possessing a current A.M. Best, Inc. rating of B++. In lieu of State of Arizona licensing, the stipulated insurance may be purchased from a company or companies, which are authorized to do business in the State of Arizona, provided that said insurance companies meet the approval of County. The form of any insurance policies and forms must be acceptable to County.

3.5.2 All insurance required herein shall be maintained in full force and effect until all work or service required to be performed under the terms of the Contract is satisfactorily completed and formally accepted. Failure to do so may, at the sole discretion of County, constitute a material breach of this Contract.

3.5.3 Contractor's insurance shall be primary insurance as respects County, and any insurance or self-insurance maintained by County shall not contribute to it.

3.5.4 Any failure to comply with the claim reporting provisions of the insurance policies or any breach of an insurance policy warranty shall not affect the County's right to coverage afforded under the insurance policies.

3.5.5 The insurance policies may provide coverage that contains deductibles or self-insured retentions. Such deductible and/or self-insured retentions shall not be applicable with respect to the coverage provided to County under such policies. Contractor shall be solely responsible for the deductible and/or self-insured retention and County, at its option, may require Contractor to secure payment of such deductibles or self-insured retentions by a surety bond or an irrevocable and unconditional letter of credit.

3.5.6 County reserves the right to request and to receive, within 10 working days, certified copies of any or all of the herein required insurance certificates. County shall not be obligated to review policies and/or endorsements or to advise Contractor of any deficiencies in such policies and endorsements, and such receipt shall not relieve Contractor from, or be deemed a waiver of County's right to insist on strict fulfillment of Contractor's obligations under this Contract.

3.5.7 The insurance policies required by this Contract, except Workers' Compensation, and Errors and Omissions, shall name County, its agents, representatives, officers, directors, officials and employees as Additional Insureds.

3.5.8 The policies required hereunder, except Workers' Compensation, and Errors and Omissions, shall contain a waiver of transfer of rights of recovery (subrogation) against

County, its agents, representatives, officers, directors, officials and employees for any claims arising out of Contractor's work or service.

3.5.9 Commercial General Liability:

Commercial General Liability insurance and, if necessary, Commercial Umbrella insurance with a limit of not less than $2,000,000 for each occurrence, $2,000,000 Products/Completed Operations Aggregate, and $4,000,000 General Aggregate Limit. The policy shall include coverage for bodily injury, broad form property damage, personal injury, products and completed operations and blanket contractual coverage, and shall not contain any provision which would serve to limit third party action over claims. There shall be no endorsement or modification of the CGL limiting the scope of coverage for liability arising from explosion, collapse, or underground property damage.

3.5.10 Automobile Liability:

Commercial/Business Automobile Liability insurance and, if necessary, Commercial Umbrella insurance with a combined single limit for bodily injury and property damage of not less than $2,000,000 each occurrence with respect to any of the Contractor's owned, hired, and non-owned vehicles assigned to or used in performance of the Contractor's work or services under this Contract.

3.5.11 Workers' Compensation:

3.5.11.1 Workers' Compensation insurance to cover obligations imposed by federal and state statutes having jurisdiction of Contractor's employees engaged in the performance of the work or services under this Contract; and Employer's Liability insurance of not less than $1,000,000 for each accident, $1,000,000 disease for each employee, and $1,000,000 disease policy limit.

3.5.11.2 Contractor waives all rights against County and its agents, officers, directors and employees for recovery of damages to the extent these damages are covered by the Workers' Compensation and Employer's Liability or commercial umbrella liability insurance obtained by Contractor pursuant to this Contract.

3.5.12 Errors and Omissions Insurance:

Errors and Omissions insurance and, if necessary, Commercial Umbrella insurance, which will insure and provide coverage for errors or omissions of the Contractor, with limits of no less than $1,000,000 for each claim.

3.5.13 Certificates of Insurance.

~~Prior to commencing work or services under this Contract, Contractor shall have insurance in effect as required by the Contract in the form provided by the County, issued by Contractor's insurer(s), as evidence that policies providing the required coverage, conditions and limits required by this Contract are in full force and effect. - Such certificates shall be made available to the County upon ten (10) business days. BY SIGNING THE AGREEMENT PAGE THE CONTRACTOR AGREES TO THIS REQUIREMENT AND FAILURE TO MEET THIS REQUIREMENT WILL RESULT IN CANCELLATION OF CONTRACT.~~

~~In the event any insurance policy (ies) required by this contract is (are) written on a "claims made" basis, coverage shall extend for two years past completion and acceptance of Contractor's work or services and as evidenced by annual Certificates of Insurance.~~

~~If a policy does expire during the life of the Contract, a renewal certificate must be sent to County fifteen (15) days prior to the expiration date.~~

Prior to Contract award, Contractor shall furnish the County with valid and complete certificates of insurance, or formal endorsements as required by the Contract in the form provided by the County, issued by Contractor's insurer(s), as evidence that policies providing the required coverage, conditions and limits required by this Contract are in full force and effect. Such certificates shall identify this contract number and title.

In the event any insurance policy(ies) required by this Contract is(are) written on a "claims made" basis, coverage shall extend for two (2) years past completion and acceptance of Contractor's work or services and as evidenced by annual Certificates of Insurance.

If a policy does expire during the life of the Contract, a renewal certificate must be sent to County fifteen (15) calendar days prior to the expiration date.

3.5.14 Cancellation and Expiration Notice.

~~Insurance required herein shall not be permitted to expire, be canceled, or materially changed without thirty (30) days prior written notice to the County.~~

Applicable to all insurance policies required within the Insurance Requirements of this Contract, Contractor's insurance shall not be permitted to expire, be suspended, be canceled, or be materially changed for any reason without thirty (30) calendar days prior written notice to Maricopa County. Contractor must provide to Maricopa County, within two (2) business days of receipt, if they receive notice of a policy that has been or will be suspended, canceled, materially changed for any reason, has expired, or will be expiring. Such notice shall be sent directly to Maricopa County Office of Procurement Services and shall be mailed or hand delivered to 320 West Lincoln Street, Phoenix, AZ 85003, or emailed to Procurement Officer noted in solicitation.

3.6 PROCUREMENT CARD ORDERING CAPABILITY:

County may determine to use a procurement card that may be used from time-to-time, to place and make payment for orders under this Contract. Contractors without this capability may be considered non-responsive and not eligible for award consideration.

3.7 INTERNET ORDERING CAPABILITY:

It is the intent of County to use the Internet to communicate and to place orders under this Contract. Contractors without this capability may be considered non-responsive and not eligible for award consideration.

3.8 ORDERING AUTHORITY.

~~The Contractor should understand that any request for purchase of product(s) shall be accompanied by a valid purchase order, issued by Office of Procurement Services, or by a Certified Agency Procurement Aid (CAPA).~~

~~County departments, cities, other counties, schools and special districts, universities, nonprofit educational and public health institutions may also purchase from under this Contract at their discretion and/or other state and local agencies (Customers) may procure the products under this Contract by the issuance of a purchase order to the Respondent. Purchase orders must cite the Contract number.~~

~~Contract award is in accordance with the Maricopa County Procurement Code. All requirements for the competitive award of this Contract have been met. A purchase order for the product(s) is~~

~~the only document necessary for Customers to purchase and for the Contractor to proceed with delivery of product(s) available under this Contract.~~

~~Any attempt to represent any product not specifically awarded under this Contract is a violation of the Contract. Any such action is subject to the legal and contractual remedies available to the County, inclusive of, but not limited to, Contract cancellation, suspension and/or debarment of the Contractor.~~

Any request for purchase shall be accompanied by a valid purchase order, issued by Office of Procurement Services, a Purchase Order issued by the using Department or direction by a Certified Agency Procurement Aid (CAPA) with a Purchase Card for payment.

~~REQUIREMENTS CONTRACT:~~

~~Contractors signify their understanding and agreement by signing a bid submittal, that the Contract resulting from the bid will be a requirements contract. However, the Contract does not guarantee any minimum or maximum number of purchases will be made. It only indicates that if purchases are made for the materials contained in the Contract, they will be purchased from the Contractor awarded that item. Orders will only be placed when the County identifies a need and proper authorization and documentation have been approved.~~

~~County reserves the right to cancel Purchase Orders within a reasonable period of time after issuance. Should a Purchase Order be canceled, the County agrees to reimburse the Contractor but only for actual and documentable costs incurred by the Contractor due to and after issuance of the Purchase Order. The County will not reimburse the Contractor for any costs incurred after receipt of County notice of cancellation, or for lost profits, shipment of product prior to issuance of Purchase Order, etc.~~

~~Contractors agree to accept verbal notification of cancellation from the County Procurement Officer with written notification to follow. By submitting a bid in response to this Invitation for Bids, the Contractor specifically acknowledges to be bound by this cancellation policy.~~

3.9 **NO MINIMUM OR MAXIMUM PURCHASE OBLIGATION:**

3.9.1 **This Contract does not guarantee any minimum or maximum purchases will be made. Orders will only be placed under this Contract when the County identifies a need and proper authorization and documentation have been approved.**

3.9.2 **Contractors agree to accept verbal notification of cancellation of Purchase Orders from the County Procurement Officer with written notification to follow. Contractor specifically acknowledges to be bound by this cancellation policy.**

3.10 UNCONDITIONAL TERMINATION FOR CONVENIENCE:

Maricopa County may terminate the resultant Contract for convenience by providing sixty (60) calendar days advance notice to the Contractor.

3.11 TERMINATION FOR DEFAULT:

~~If the Contractor fails to meet deadlines, or fails to provide the agreed upon service/material altogether, a termination for default will be issued. The termination for default will be issued only after the County deems that the Contractor has failed to remedy the problem after being forewarned.~~

The County may, by written notice of default to the Contractor, terminate this Contract in whole or in part if the Contractor fails to:

3.11.1 **Deliver the supplies or to perform the services within the time specified in this Contract or any extension;**

3.11.2 **Make progress, so as to endanger performance of this Contract; or**

3.11.3 **Perform any of the other provisions of this Contract.**

The County's right to terminate this Contract under these subparagraphs may be exercised if the Contractor does not cure such failure within ten (10) business days (or more if authorized in writing by the County) after receipt of the notice from the Procurement Officer specifying the failure.

3.12 TERMINATION BY THE COUNTY:

If the Contractor should be adjudged bankrupt or should make a general assignment for the benefit of its creditors, additionally if a receiver should be appointed on account of its insolvency, the County may terminate the Contract. If the Contractor should persistently or repeatedly refuse or should fail, except in cases for which extension of time is provided, to provide enough properly skilled workers or proper materials, or persistently disregard laws and ordinances, or not proceed with work or otherwise be guilty of a substantial violation of any provision of this Contract, then the County may terminate the Contract. Prior to termination of the Contract, the County shall give the Contractor fifteen- (15) calendar day's written notice. Upon receipt of such termination notice, the Contractor shall be allowed fifteen (15) calendar days to cure such deficiencies.

3.13 STATUTORY RIGHT OF CANCELLATION FOR CONFLICT OF INTEREST:

Notice is given that pursuant to A.R.S. § 38-511 the County may cancel any Contract without penalty or further obligation within three years after execution of the contract, if any person significantly involved in initiating, negotiating, securing, drafting or creating the contract on behalf of the County is at any time while the Contract or any extension of the Contract is in effect, an employee or agent of any other party to the Contract in any capacity or consultant to any other party of the Contract with respect to the subject matter of the Contract. Additionally, pursuant to A.R.S § 38-511 the County may recoup any fee or commission paid or due to any person significantly involved in initiating, negotiating, securing, drafting or creating the contract on behalf of the County from any other party to the contract arising as the result of the Contract.

3.14 OFFSET FOR DAMAGES;

In addition to all other remedies at Law or Equity, the County may offset from any money due to the Contractor any amounts Contractor owes to the County for damages resulting from breach or deficiencies in performance of the contract.

3.15 ADDITIONS/DELETIONS OF SERVICE:

~~The County reserves the right to add and/or delete materials to a Contract. - If a service requirement is deleted, payment to the Contractor will be reduced proportionately, to the amount of service reduced in accordance with the bid price. - If additional materials are required from a Contract, prices for such additions will be negotiated between the Contractor and the County.~~

~~The County reserves the right of final approval on proposed staff for all Task Orders. Also, upon request by the County, the Contractor will be required to remove any employees working on County projects and substitute personnel based on the discretion of the County within two business days, unless previously approved by the County.~~

The County reserves the right to add and/or delete materials to a Contract. If a service requirement is deleted, payment to the Contractor will be reduced proportionately, to the amount of service reduced in accordance with the bid price. If additional materials are required from a Contract, prices for such additions will be negotiated between the Contractor and the County.

3.16 SUBCONTRACTING:

3.16.1 The Contractor may not assign a Contract or Subcontract to another party for performance of the terms and conditions hereof without the written consent of the County. All correspondence authorizing subcontracting must reference the Bid Serial Number and identify the job project.

3.16.2 The Subcontractor's rate for the job shall not exceed that of the Prime Contractor's rate, as bid in the pricing section, unless the Prime Contractor is willing to absorb any higher rates. The Subcontractor's invoice shall be invoiced directly to the Prime Contractor, who in turn shall pass-through the costs to the County, without mark-up. A copy of the Subcontractor's invoice must accompany the Prime Contractor's invoice.

3.17 AMENDMENTS:

~~All amendments to this Contract shall be in writing and approved/signed by both parties. Maricopa County Office of Procurement Services shall be responsible for approving all amendments for Maricopa County.~~

All amendments to this Contract shall be in writing and approved/signed by both parties. The Maricopa County Office of Procurement Services shall be responsible for approving all amendments for Maricopa County.

3.18 ACCESS TO AND RETENTION OF RECORDS FOR THE PURPOSE OF AUDIT AND/OR OTHER REVIEW:

~~In accordance with section MCI 371 of the Maricopa County Procurement Code the Contractor agrees to retain all books, records, accounts, statements, reports, files, and other records and back-up documentation relevant to this Contract for six (6) years after final payment or until after the resolution of any audit questions which could be more than six (6) years, whichever is latest. The County, Federal or State auditors and any other persons duly authorized by the Department shall have full access to, and the right to examine, copy, and make use of, any and all said materials.~~

~~If the Contractor's books, records , accounts, statements, reports, files, and other records and back-up documentation relevant to this Contract are not sufficient to support and document that requested services were provided, the Contractor shall reimburse Maricopa County for the services not so adequately supported and documented.~~

~~If at any time it is determined by the County that a cost for which payment has been made is a disallowed cost, the County shall notify the Contractor in writing of the disallowance. The course of action to address the disallowance shall be at sole discretion of the County, and may include either an adjustment to future claim submitted by the Contractor by the amount of the disallowance, or to require reimbursement forthwith of the disallowed amount by the Contractor by issuing a check payable to Maricopa County.~~

3.18.1 **In accordance with section MCI 371 of the Maricopa County Procurement Code, the Contractor agrees to retain (physical or digital copies of) all books, records, accounts, statements, reports, files, and other records and back-up documentation relevant to this Contract for six (6) years after final payment or until after the resolution of any audit questions which could be more than six (6) years, whichever is latest. The County, Federal or State auditors and any other persons duly authorized by the Department shall have full access to, and the right to examine, copy and make use of, any and all said materials.**

3.18.2 **If the Contractor's books, records , accounts, statements, reports, files, and other records and back-up documentation relevant to this Contract are not sufficient to support and document that requested services were provided, the Contractor shall reimburse Maricopa County for the services not so adequately supported and documented.**

3.19 AUDIT DISALLOWANCES:

~~If at any time it is determined by the County that a cost for which payment has been made is a disallowed cost, the County shall notify the Contractor in writing of the disallowance and the required course of action, which shall be at the option of the County either to adjust any future claim submitted by the Contractor by the amount of the disallowance or to require repayment of the disallowed amount by the Contractor forthwith issuing a check payable to Maricopa County.~~

If at any time it is determined by the County that a cost for which payment has been made is a disallowed cost, the County shall notify the Contractor in writing of the disallowance. The course of action to address the disallowance shall be at sole discretion of the County, and may include either an adjustment to future invoices, request for credit, request for a check or a deduction from current invoices submitted by the Contractor equal to the amount of the disallowance, or to require reimbursement forthwith of the disallowed amount by the Contractor by issuing a check payable to Maricopa County.

3.20 VALIDITY:

The invalidity, in whole or in part, of any provision of the Contract shall not void or affect the validity of any other provision of the Contract.

3.21 RIGHTS IN DATA:

The County shall have the use of data and reports resulting from a Contract without additional cost or other restriction except as may be established by law or applicable regulation. Each party shall supply to the other party, upon request, any available information that is relevant to a Contract and to the performance thereunder.

3.22 RELATIONSHIPS:

~~In the performance of the services described herein, the Contractor shall act solely as an independent contractor, and nothing herein or implied herein shall at any time be construed as to create the relationship of employer and employee, partnership, principal and agent, or joint venture between the County and the Contractor.~~

3.22.1 **In the performance of the services described herein, the Contractor shall act solely as an independent contractor, and nothing herein or implied herein shall at any time be construed as to create the relationship of employer and employee, co-employee, partnership, principal and agent, or joint venture between the County and the Contractor.**

3.22.2 **The County reserves the right of final approval on proposed staff. Also, upon request by the County, the Contractor will be required to remove any employees working on County projects and substitute personnel based on the discretion of the County within two business days, unless previously approved by the County.**

3.23 CERTIFICATION REGARDING DEBARMENT AND SUSPENSION

~~The undersigned (authorized official signing for the Contractor) certifies to the best of his or her knowledge and belief, that the Contractor, defined as the primary participant in accordance with 45 CFR Part 76, and its principals:~~

~~are not presently debarred, suspended, proposed for debarment, declared ineligible, or voluntarily excluded from covered transactions by any Federal Department or agency;~~

~~have not within 3-year period preceding this Contract been convicted of or had a civil judgment rendered against them for commission of fraud or a criminal offense in connection with obtaining, attempting to obtain, or performing a public (Federal, State or local) transaction or contract under a public transaction; violation of Federal or State~~

~~antitrust statues or commission of embezzlement, theft, forgery, bribery, falsification or destruction of records, making false statements, or receiving stolen property;~~

~~are not presently indicted or otherwise criminally or civilly charged by a government entity (Federal, State or local) with commission of any of the offenses enumerated in paragraph (2) of this certification; and~~

~~Have not within a 3-year period preceding this Contract had one or more public transaction (Federal, State or local) terminated for cause of default.~~

~~Should the Contractor not be able to provide this certification, an explanation as to why should be attached to the Contact.~~

~~The Contractor agrees to include, without modification, this clause in all lower tier covered transactions (i.e. transactions with subcontractors) and in all solicitations for lower tier covered transactions related to this Contract.~~

3.23.1 **The undersigned (authorized official signing on behalf of the Contractor) certifies to the best of his or her knowledge and belief that the Contractor, its current officers and directors;**

3.23.1.1 **are not presently debarred, suspended, proposed for debarment, declared ineligible, or voluntarily excluded from being awarded any contract or grant by any United States Department or Agency or any state, or local jurisdiction;**

3.23.1.2 **have not within three (3) year period preceding this Contract;**

3.23.1.2.1 **been convicted of fraud or any criminal offense in connection with obtaining, attempting to obtain, or as the result of performing a government entity (Federal, State or local) transaction or contract; and**

3.23.1.2.2 **been convicted of violation of any Federal or State antitrust statues or conviction for embezzlement, theft, forgery, bribery, falsification or destruction of records, making false statements, or receiving stolen property regarding a government entity transaction or contract; and**

3.23.1.2.3 **are not presently indicted or criminally charged by a government entity (Federal, State or local) with commission of any criminal offenses in connection with obtaining, attempting to obtain, or as the result of performing a government entity public (Federal, State or local) transaction or contract; and are not presently facing any civil charges from any governmental entity regarding obtaining, attempting to obtain, or from performing any governmental entity contract or other transaction; and have not within a three (3) year period preceding this Contract had any public transaction (Federal, State or local) terminated for cause or default.**

3.23.1.3 **If any of the above circumstances described in the paragraph are applicable to the entity submitting a bid for this requirement, include with your bid an explanation of the matter including any final resolution.**

3.23.2 **The Contractor shall include, without modification, this clause in all lower tier covered transactions (i.e. transactions with subcontractors) and in all solicitations for lower tier covered transactions related to this Contract.**

3.24 VERIFICATION REGARDING COMPLIANCE WITH ARIZONA REVISED STATUTES §41-4401 AND FEDERAL IMMIGRATION LAWS AND REGULATIONS:

3.24.1 By entering into the Contract, the Contractor warrants compliance with the Immigration and Nationality Act (INA using e-verify) and all other federal immigration laws and regulations related to the immigration status of its employees and A.R.S. §23-214(A). The contractor shall obtain statements from its subcontractors certifying compliance and shall furnish the statements to the Procurement Officer upon request. These warranties shall remain in effect through the term of the Contract. The Contractor and its subcontractors shall also maintain Employment Eligibility Verification forms (I-9) as required by the Immigration Reform and Control Act of 1986, as amended from time to time, for all employees performing work under the Contract and verify employee compliance using the E-verify system and shall keep a record of the verification for the duration of the employee's employment or at least three years, whichever is longer. I-9 forms are available for download at USCIS.GOV.

3.24.2 The County retains the legal right to inspect contractor and subcontractor employee documents performing work under this Contract to verify compliance with paragraph 3.24.1 of this Section. Contractor and subcontractor shall be given reasonable notice of the County's intent to inspect and shall make the documents available at the time and date specified. Should the County suspect or find that the Contractor or any of its subcontractors are not in compliance, the County will consider this a material breach of the contract and may pursue any and all remedies allowed by law, including, but not limited to: suspension of work, termination of the Contract for default, and suspension and/or debarment of the Contractor. All costs necessary to verify compliance are the responsibility of the Contractor.

3.25 CONTRACTOR LICENSE REQUIREMENT:

3.25.1 The Respondent shall procure all permits, insurance, licenses and pay the charges and fees necessary and incidental to the lawful conduct of his/her business, and as necessary complete any required certification requirements, required by any and all governmental or non-governmental entities as mandated to maintain compliance with and in good standing for all permits and/or licenses. The Respondent shall keep fully informed of existing and future trade or industry requirements, Federal, State and Local laws, ordinances, and regulations which in any manner affect the fulfillment of a Contract and shall comply with the same. Contractor shall immediately notify both Office of Procurement Services and the using agency of any and all changes concerning permits, insurance or licenses.

3.25.2 Respondents furnishing finished products, materials or articles of merchandise that will require installation or attachment as part of the Contract, shall possess any licenses required. A Respondent is not relieved of its obligation to posses the required licenses by subcontracting of the labor portion of the Contract. Respondents are advised to contact the Arizona Registrar of Contractors, Chief of Licensing, at (602) 542-1525 to ascertain licensing requirements for a particular contract. Respondents shall identify which license(s), if any, the Registrar of Contractors requires for performance of the Contract.

3.26 INFLUENCE

As prescribed in MC1-1202 of the Maricopa County Procurement Code, any effort to influence an employee or agent to breach the Maricopa County Ethical Code of Conduct or any unethical conduct may be grounds for Disbarment or Suspension under MC1-902.
An attempt to influence includes, but is not limited to:

3.26.1 A Person offering or providing a gratuity, gift, tip, present, donation, money, entertainment or educational passes or tickets, or any type valuable contribution or subsidy,

3.26.2 That is offered or given with the intent to influence a decision, obtain a contract, garner favorable treatment, or gain favorable consideration of any kind.

If a Person attempts to influence any employee or agent of Maricopa County, the Chief Procurement Officer, or his designee, reserves the right to seek any remedy provided by the Maricopa County Procurement Code, any remedy in equity or in the law, or any remedy provided by this contract.

3.27 PUBLIC RECORDS:

~~All Offers submitted and opened are public records and must be retained by the Records Manager at the Office of Procurement Services. Offers shall be open to public inspection after Contract award and execution, except for such Offers deemed to be confidential by the Office of Procurement Services. If an Offeror believes that information in its Offer should remain confidential, it shall indicate as confidential, the specific information and submit a statement with its offer detailing the reasons that the information should not be disclosed. Such reasons shall include the specific harm or prejudice which may arise. The Records Manager of the Office of Procurement Services shall determine whether the identified information is confidential pursuant to the Maricopa County Procurement Code.~~

Under Arizona law, all Offers submitted and opened are public records and must be retained by the Records Manager at the Office of Procurement Services. Offers shall be open to public inspection and copying after Contract award and execution, except for such Offers or sections thereof determined to contain proprietary or confidential information by the Office of Procurement Services. If an Offeror believes that information in its Offer or any resulting Contract should not be released in response to a public record request under Arizona law, the Offeror shall indicate the specific information deemed confidential or proprietary and submit a statement with its offer detailing the reasons that the information should not be disclosed. Such reasons shall include the specific harm or prejudice which may arise from disclosure. The Records Manager of the Office of Procurement Services shall determine whether the identified information is confidential pursuant to the Maricopa County Procurement Code.

3.28 POST AWARD MEETING:

The Contractor may be required to attend a post-award meeting with the Using Agency to discuss the terms and conditions of this Contract. This meeting will be coordinated by the Procurement Officer of the Contract.

~~3.29 ISRAEL BOYCOTT:~~

~~By submitting this proposal the Contractor certifies that they are in compliance with Article 9, Arizona Revised Statutes Section 35-393 et seq.~~

3.30 **APPLICABLE TAXES:**

3.30.1 **Payment of Taxes: The Contractor shall pay all applicable taxes. With respect to any installation labor on items that are not attached to real property performed by Contractor under the terms of this Contract, the installation labor cost and the gross receipts for materials provided shall be listed separately on the Contractor's invoices.**

3.30.2 **State and Local Transaction Privilege Taxes: To the extent any state and local transaction privilege taxes apply to sales made under the terms of this contract, it is the responsibility of the seller to collect and remit all applicable taxes to the proper taxing jurisdiction of authority.**

3.30.3 **Tax Indemnification: Contractor and all subcontractors shall pay all Federal, state, and local taxes applicable to its operation and any persons employed by the**

Contractor. Contractor shall, and require all subcontractors to hold Maricopa County harmless from any responsibility for taxes, damages and interest, if applicable, contributions required under Federal, and/or state and local laws and regulations and any other costs including transaction privilege taxes, unemployment compensation insurance, Social Security and Worker's Compensation.

3.31 **ORDER LEAD-TIME NOTIFICATION:**

Contractors submitting bids shall advise the County of lead-time(s) for the required items specified in this solicitation at the time of bid submission. Notification of any changes to lead time (learned after submission of bid) shall also be the Contractor's responsibility. The Contractor shall also notify all County Representatives included on Purchase Orders of lead-time information. If the item(s) become no longer available, Contractor shall notify County of the last available ordering date for the item(s), and may provide County with alternative item(s) that the County may elect to purchase at its option. If the alternative item(s) do not meet the County's requirements, County may terminate this Contract for Convenience per Section 3.10.

3.32 **BACKGROUND CHECK:**

Bidders/proposers need to be aware that there may be multiple background checks (Sheriff's Office, County Attorney's Office, Courts as well as Maricopa County general government) to determine if the respondent is acceptable to do business with the County. This applies to (but is not limited to) the Contractor, subcontractors and employees and the failure to pass these checks shall deem the respondent non-responsible.

3.33 **FORCE MAJEURE:**

3.33.1 **Neither party shall be liable for failure of performance, nor incur any liability to the other party on account of any loss or damage resulting from any delay or failure to perform all or any part of this Contract if such delay or failure is caused by events, occurrences, or causes beyond the reasonable control and without negligence of the parties. Such events, occurrences, or causes will include Acts of God/Nature (including fire, flood, earthquake, storm, hurricane or other natural disaster), war, invasion, act of foreign enemies, hostilities (whether war is declared or not), civil war, riots, rebellion, revolution, insurrection, military or usurped power or confiscation, terrorist activities, nationalization, government sanction, lockout, blockage, embargo, labor dispute, strike, interruption or failure of electricity or telecommunication service.**

3.33.2 **Each party, as applicable, shall give the other party notice of its inability to perform and particulars in reasonable detail of the cause of the inability. Each party must use best efforts to remedy the situation and remove, as soon as practicable, the cause of its inability to perform or comply.**

3.33.3 **The party asserting *Force Majeure* as a cause for non-performance shall have the burden of proving that reasonable steps were taken to minimize delay or damages caused by foreseeable events, that all non-excused obligations were substantially fulfilled, and that the other party was timely notified of the likelihood or actual occurrence which would justify such an assertion, so that other prudent precautions could be contemplated.**

3.34 **PURCHASE ORDERS:**

County reserves the right to cancel Purchase Orders within a reasonable period of time after issuance. Should a Purchase Order be canceled, the County agrees to reimburse the Contractor for actual and documentable costs incurred by the Contractor in response to the Purchase Order. The County will not reimburse the Contractor for any costs incurred after receipt of County notice of cancellation, or for lost profits, shipment of product prior to issuance of Purchase Order, etc.

3.35 **STRICT COMPLIANCE:**

Acceptance by County of a performance that is not in strict compliance with the terms of the Contract shall not be deemed to be a waiver of strict compliance with respect to all other terms of the Contract.

3.36 **SEVERABILITY:**

The removal, in whole or in part, of any provision of this Contract shall not void or affect the validity of any other provision of this Contract.

3.37 **NON-DISCRIMINATION:**

Contractor agrees to comply with all provisions and requirements of Arizona Executive Order 2009-09 including flow down of all provisions and requirements to any subcontractors. Executive Order 2009-09 supersedes Executive order 99-4 and amends Executive order 75-5 and may be viewed and downloaded at the Arizona State Library Research website (http://azmemory.azlibrary.gov/cdm/singleitem/collection/execorders/id/680/rec/1) which is hereby incorporated into this contract as if set forth in full herein. During the performance of this Contract, Contractor shall not discriminate against any employee, client or any other individual in any way because of that person's age, race, creed, color, religion, sex, disability or national origin.

3.38 **CONFIDENTIALITY INFORMATION:**

Any information obtained in the course of performing this Contract may include information that is proprietary or confidential to the County. This provision establishes the Contractor's obligation regarding such information.

The Contractor shall establish and maintain procedures and controls that are adequate to assure that no information contained in its records and/or obtained from the County or from others in carrying out its functions (services) under the Contract shall be used by or disclosed by it, its agents, officers, or employees, except as required to efficiently perform duties under the Contract. The Contractor's procedures and controls at a minimum must be the same procedures and controls it uses to protect its own proprietary or confidential information. If, at any time during the duration of the Contract, the County determines that the procedures and controls in place are not adequate, the Contractor shall institute any new and/or additional measures requested by the County within fifteen (15) calendar days of the written request to do so.

Any requests to the Contractor for County proprietary or confidential information s shall be referred to the County for review and approval, prior to any dissemination

3.39 **INTEGRATION:**

This Contract represents the entire and integrated agreement between the parties and supersedes all prior negotiations, proposals, communications, understandings, representations, or agreements, whether oral or written, express or implied.

3.40 **UNIFORM ADMINISTRATIVE REQUIREMENTS:**

By entering into this Contract, the Contractor agrees to comply with all applicable provisions of Title 2, Subtitle A, Chapter II, PART 200—UNIFORM ADMINISTRATIVE REQUIREMENTS, COST PRINCIPLES, AND AUDIT REQUIREMENTS FOR FEDERAL AWARDS contained in Title 2 C.F.R. § 200 *et seq.*

3.41 **GOVERNING LAW:**

This Contract shall be governed by the laws of the State of Arizona. Venue for any actions or lawsuits involving this Contract will be in Maricopa County Superior Court, Phoenix, Arizona.

Town of Florence Bid Tabulation Sheet

		General Ledger Account Number:	012-518-214
	Verbal (Only allowed $5,000 or less)	Date Prepared:	2/20/2019
	Written / Fax / Email (Mandatory over $5,000 bids attached)	Prepared By:	JH for D. Cisco
	Formal Sealed Bid :	Title of Bid:	Open Date:
			Close Date:

Item(s) (Include quality, Brand, Model & Color): **Blanket: Streets Traffic Sign Posts, Hardware & Accessories**

	VENDORS		Payment Terms (Discount)	Availability	Who Pays Shipping?	Unit Price	Extended Price	Comments
1	Name:	Zumar Industries of AZ		In stock		$ 20,000.00		Blanket for expenditures expected the rest of the current FY18/19. Utilizing MCDOT "Traffic Signing Materials" Cooperative Contract, Serial 16136-C, expiring 9/30/19, and Serial 14105-C, expiring 1/31/20.
	Address:	7833 N 106th Ave.			Tax:			
		Glendale, AZ 85307			Freight:			
	Contact:	Jody Case					$20,000.00	
	Phone:	623-931-7446	Fax:					
	Email:	jody@zumar.com		Date Notified of Decision:				
	Quote #:		REQ # :	53544	PO #:			
	Received:		Expires:					
2	Name:							
	Address:				Tax:			
					Freight:			
	Contact:						$ -	
	Phone:		Fax:					
	Email:			Date Notified of Decision:				
	Quote #:		REQ # :		PO #:			
	Received:		Expires:					
3	Name:							
	Address:				Tax:			
					Freight:			
	Contact:							
	Phone:		Fax:					
	Email:			Date Notified of Decision:				
	Quote #:		REQ # :		PO #:			
	Received:		Expires:					

Attach additional page(s), if necessary.

Vendor Selected:

Justification (if not lowest bid.):

Department Head Approval:		Date:	3/14/19
Finance Director Approval:		Date:	
Town Manager Approval:		Date:	

Exhibits Attached:	

If over $24,999, must go to Town Council for approval.

Attach this approved form to purchase request with written quotes, if applicable.

TOWN OF FLORENCE, ARIZONA
CONTRACT FOR COOPERATIVE USE OF MARICOPA COUNTY SOLICITATION/CONTRACT, SERIAL 16136-C, FOR TRAFFIC SIGNING MATERIALS. ALSO USE OF CONTRACT SERIAL 14105-C FOR TRAFFIC SIGN POSTS, HARDWARE AND ACCESSORIES

THIS CONTRACT (the "Contract") is made and entered into effective as of the 1ST day of April 2019 ("Effective date"), by and between the Town of Florence, Arizona (the "Town"), and Zumar Industries, Inc. (the "Contractor") and together with the Contract Documents referred to and incorporated herein, is the "resultant contract" contemplated in the Maricopa County Solicitation/Contract Serial Nos. 16136-C for Traffic Signing Materials, and Serial 14105-C for Traffic Sign Posts, Hardware and Accessories effective October 1, 2019. The Town and the Contractor are sometimes referred to in this Contract collectively as the "Parties" and each individually as a "Party".

1. **SCOPE OF WORK**: The Contractor shall provide the Town the materials and services described in the attached scope of materials and services set forth in **Exhibit "1"** ("Scope of Materials" or "Goods"). The Contractor shall provide the Goods in accordance with the schedule attached in **Exhibit "1"**, and the Contract Documents, including all exhibits to the Master Contract including but not limited to the Contractor's Response Serial 16136-C and 14105-C, Specifications, Technical Requirements, Attachment A, and Special Terms and Conditions. Contractor agrees, at its own cost and expense, to do all of the work and furnish all of the equipment, personnel and materials necessary to provide, in a good and substantial manner and to the satisfaction of the Town, the Goods.
2. **PRIORITY OF DOCUMENTS**. It is further expressly agreed by and between the parties that should there be any conflict between the terms of this Contract, the Master Contract, or the Contractor's Proposal, then this Contract and the provisions of the Contract Documents shall control and nothing herein shall be considered as an acceptance of the terms of the said Proposal conflicting herewith or the Master Contract, unless expressly state herein.
3. **INCORPORATION**: For and in consideration of this Contract and other good and valuable consideration, the Contractor agrees that the master cooperative solicitation/contract (Maricopa County Solicitation/Contract Serial Nos. 16136-C for Traffic Signing Materials, and Serial 14105-C for Traffic Sign Posts, Hardware and Accessories effective October 1, 2019 is in full force and effect, and all terms and conditions of the Master Contract are incorporated by reference into this Contract, creating an agreement identical in terms between the Town and Contractor. In the Master Contract, the terms: "County", "Maricopa County" "Using Agency", shall be deemed to be and refer to the Town of Florence, and the terms: "Contractor", "Respondent" or "firm" shall be deemed to be and refer to the Contractor under this Contract.
4. **CONTRACT DOCUMENTS**: This Contract consists of the following contract documents, which by reference are incorporated herein:
   A. This signed Contract.
   B. The solicitation Documents for the Maricopa County Solicitation/Contract Serial Nos. 16136-C for Traffic Signing Materials, and Serial 14105-C for Traffic Sign Posts, Hardware and Accessories effective October 1, 2019, between Maricopa County and Zumar Industries, Inc., including, but not limited to: Instructions, Fee Schedules; Notices; Checklists; Requirements for Proposers; General Conditions; Special Conditions; Scope of Work; Work Schedule; Certificates of Compliance; Warranties for Work; Work Forms; Attachments; Price Sheets; Questionnaires; Response Forms; Specifications and Pricing Sheets; Special Provisions and Specifications; Technical Provisions and Specifications; Schedules; Cooperative

Authorizations; Specifications; Technical Requirements; Special Terms and Conditions; Attachment A; **Contract No. Serial 16136-C and Serial 14105-C**; Maps and Addenda (the "Contract Documents" or "Master Contract").

5. **CONTRACT PRICING**: Contract pricing shall be consistent with the Contract Documents and Contractor's Proposal and is listed in **Exhibit "1"** (Price Sheet) and shall not exceed **$60,000.**
6. **TERM OF CONTRACT**: The term of this Contract shall be from the Effective Date through satisfactory completion of the Services or delivery of Goods and acceptance of the Services and/or Goods by the Town. Time is of the essence to the terms of this Contract.
7. **COMPLIANCE WITH FEDERAL AND STATE LAWS**.
   A. The Contractor understands and acknowledges the applicability to it of the American with Disabilities Act, the Immigration Reform and Control Act of 1986 and the Drug Free Workplace Act of 1989.

   B. Under the provisions of A. R. S. § 41-4401, Contractor hereby warrants to the Town that the Contractor and each of its subcontractors will comply with, and are contractually obligated to comply with, all Federal Immigration laws and regulations that relate to their employees and A. R. S. § 23-214 (A) (hereinafter "Contractor Immigration Warranty").

   C. A breach of the Contractor Immigration Warranty shall constitute a material breach of this Contract and shall subject the Contractor to penalties up to and including termination of this Contract at the sole discretion of the Town.

   D. The Town retains the legal right to inspect the papers of any Contractor or Subcontractor's employee who works on this Contract to ensure that the Contractor or Subcontractor is complying with the Contractor Immigration Warranty. Contractor agrees to assist the Town in regard to any such inspections.

   E. The Town may, at is sole discretion, conduct random verification of the employment records of the Contractor and any subcontractors to ensure compliance with Contractor's Immigration Warranty. Contractor agrees to assist the Town in regard to any random verifications performed.

   F. Neither the Contractor nor any subcontractor shall be deemed to have materially breached the Contractor Immigration Warranty if the Contractor or subcontractor establishes that it has complied with the employment verification provisions prescribed by section 274A and 274B of the Federal Immigration and Nationality Act and the E-Verify requirements prescribed by A. R. S. § 23-214, Subsection A.

   G. The provisions of this Section must be included in any contract the Contractor enters into with any and all of its subcontractors who provide services under this Contract or any subcontract. "Services" are defined as furnishing labor, time or effort in the State of Arizona by a contractor or subcontractor. Services include construction or maintenance of any structure, building or transportation facility or improvement to real property.

   H. The provisions of this Section must be included in any contract the Contractor enters into with any and all of its subcontractors who provide services under this Contract or any subcontract.

8. **METHOD OF PAYMENT**. Method of payment shall be set forth in **Exhibit "1"**. If payment is to be made monthly, Contractor shall prepare monthly invoices and progress reports which clearly indicate the progress to date and the amount of compensation due by virtue of that progress. All invoices shall be for Services completed or Goods accepted by the Town.
9. **TERMINATION**. Town may terminate this Contract, or any part thereof for its sole convenience, at any time without penalty or recourse. Contractor shall receive payment for Services or Goods satisfactorily completed and accepted by Town, as determined by Town in its reasonable discretion, based on the Goods and/or Services requirements and schedule for payment.
10. **INDEPENDENT CONTRACTOR**. It is understood that Contractor shall be an independent contractor with respect to Services and/or Goods provided under this Contract, and shall not be deemed to be a partner, employee, joint venture, agent, or to have any other legal relationship with Town.
11. **Notices**. Any notice to be given under this Contract shall be in writing, shall be deemed to have been given when personally served or when mailed by certified or registered mail, addressed as follows: Town: Town of Florence, Town Clerk, 775 N. Main Street, PO Box 2670, Florence, AZ 85132; and Contractor: Zumar Industries, Inc., 7833 N. 106th Avenue, Glendale, AZ 85340, Jody Case.
12. **INDEMNIFICATION**. To the fullest extent permitted by law, the Contractor, its successors, assigns and guarantors, shall pay, defend, indemnify and hold harmless the Town of Florence, its Mayor and Council members, its agents, officers, officials, representatives and employees, from and against all demands, claims proceedings, suits, damages, losses and expenses (including but not limited to attorney fees, court costs, and the costs of appellate proceedings), and all claim adjustment and handling expenses, relating to, arising out of, or alleged to have resulted from the acts, errors, mistakes, omissions, Goods of the Contractor, its agents, employees or any tier of Contractor's subcontractors related to the Goods in the performance of this Contract. Contractor's duty to defend, hold harmless and indemnify Town of Florence, its Mayor and Council members, its agents, officers, officials, representatives and employees shall arise in connection with any claim, damage, loss or expense that is attributable to bodily injury, sickness, disease, death, or injury to, impairment, or destruction of property including loss of use of resulting therefrom, caused by Contractor's acts, errors, mistakes, omissions, Goods in the performance of this Contract including any employee of the Contractor, any tier of Contractor's subcontractors or any other person for whose acts, errors, mistakes, omissions, Goods, the Contractor may be legally liable, including Town of Florence.
13. **WARRANTY**. Contractor warrants that the Goods and Services will conform to the requirements of this Contract. Additionally, Contractor warrants that all Goods and Services will be performed in a good, workman-like and professional manner. The Town's acceptance of Goods or Services provided by Contractor shall not relieve Contractor from its obligations under this warranty. If any Goods or Services are of a substandard or unsatisfactory manner as determined by the Town, Contractor, at no additional charge to the Town, will provide Goods or redo such Services until they are in accordance with this Contract and to the Town's reasonable satisfaction. Unless otherwise agree, Contractor, warrants that Goods will be new, unused, of most current manufacture and not discontinued, will be free of defects in materials and workmanship, will be provided in accordance with manufacturer's standard warranty for at least one (1) year unless otherwise specified, and will perform in accordance with manufacturer's published specifications.
14. **PURCHASING POLICY**. The Town of Florence Town Code and Purchasing Policy govern this procurement and are incorporated as part of this Contract by this reference.

15. **GOVERNING LAW**. This Contract shall be deemed to be made under, shall be construed in accordance with, and shall be governed by the laws of the State of Arizona, without reference to choice of law or conflicts of laws principles thereof. The exclusive forum selected for any proceeding or suit in law or equity arising from or incident to this Contract shall be Pinal County, Arizona.

IN WITNESS WHEREOF, the Parties have executed this Contract effective as of the Effective Date set forth above.

TOWN OF FLORENCE, A municipal corporation

Date:_____

By: _____
Tara Walter, Mayor

ATTEST:

_____
Lisa Garcia, Town Clerk

Approved as to Form

_____
Cliff Mattice, Town Attorney

CONTRACTOR

By: _____ Date:_____

Its: _____

	TOWN OF FLORENCE COUNCIL ACTION FORM	**AGENDA ITEM 7c.**
MEETING DATE: April 1, 2019 **DEPARTMENT**: Administration **STAFF PRESENTER:** Jennifer Evans, Management Analyst **SUBJECT:** 2019 Fair Housing Proclamation		☐ **Action** ☐ **Information Only** ☐ **Public Hearing** ☐ **Resolution** ☐ **Ordinance** ☐ **Regulatory** ☐ **1st Reading** ☐ **2nd Reading** ☒ **Other**
STRATEGIC PLAN REFERENCE: ☒ Community Vitality ☐ Economic Prosperity ☐ Leadership and Governance ☐ Partnerships and Relationships ☐ Transportation and Infrastructure ☐ Statutory ☐ None		

RECOMMENDED MOTION/ACTION:

Proclamation declaring April 2019 as Fair Housing Month.

BACKGROUND/DISCUSSION:

All recipients of Community Development Block Grant (CDBG) funds must certify they affirmatively further fair housing. Declaration of this proclamation is required each year for the Town of Florence to continue to receive CDBG funds.

A VOTE OF NO WOULD MEAN:

Not applicable

A VOTE OF YES WOULD MEAN:

Not applicable

FINANCIAL IMPACT:

None

ATTACHMENTS:

2019 Fair Housing Proclamation

Proclamation

FAIR HOUSING PROCLAMATION

WHEREAS, the Civil Rights Act of 1968, commonly known as the Federal Fair Housing Act and the Fair Housing Amendments Act of 1988, prohibit discrimination in the sale, rental, leasing and financing of housing or land to be used for the construction of housing or in the provision of brokerage service on the basis of: race, color, religion, sex, disability, familial status or national origin; and

WHEREAS, the 1986 and 1988 Federal Fair Housing Acts declare that it is a national policy to ensure equal opportunities in housing; and

WHEREAS, April has traditionally been designated as Fair Housing Month in the United States.

NOW, THEREFORE, I, Tara Walter, Mayor of the Town of Florence, Arizona, do hereby proclaim April as Fair Housing Month in the Town of Florence, and do hereby urge all residents of this community to comply with and show their support for the letter and spirit of the Fair Housing Acts.

Issued this 1st day of April, 2019.

_____

Tara Walter, Mayor

ATTEST:

_____

Lisa Garcia, Town Clerk

Town of Florence
Summary of Warrants Paid
As of February 2019

Source	Amount
Warrant Register-Checks and Credit Card Payments	**$ 1,232,600.97**
Electronic Payments	
Bank and Merchant Fees	$ 4,982.86
Payroll for February-Net of Deductions	$ 474,143.75
Payroll related Payments-Liens, Levys, Garnishments, Flexible Spending, AFLAC, Deposits to PCFCU (Employee Savings)	$ 12,777.91
Retirement Contributions, Arizona State Retirement, Public Safety Retirement, Securian, Voluntary 401K Plan	$ 162,020.36
Payroll Taxes, State and Federal	$ 81,624.57
Transaction Previledge Taxes Collected Payable to State	$ 23,283.30
Medical, Dental, Life, Vision and AFLAC payments	$ 8,837.51
Community Facilities District Payments	$ -
Pulte Corporation-Debt Service Payments - Both Districts	$ 256,705.94
CFD #2 Bank Charge - Managing Debt Service	$ 1,500.00
	$ -
Electronic Payments	**$ 1,025,876.20**
Total Warrants	**$ 2,258,477.17**

Town of Florence
Warrant Register-February 2019

GL Account	Check Number	Check Issue Date	Merchant Name	Invoice Number	Invoice Date	Description	Check Amount
Deposit Accounts							
10160000	112724	2/7/2019	2nd Temp	103.0410.5	2/4/2019	Water OVERPAYMENT	95.71
10160000	112754	2/14/2019	2nd Temp	10802802	12/6/2018	Water OVERPAYMENT	64.43
10160000	112762	2/14/2019	2nd Temp	107709	2/8/2019	Water OVERPAYMENT	69.78
10160000	112768	2/14/2019	2nd Temp	716300	2/11/2019	Refund CREDIT ON ACCOUNT	17.33
10160000	112881	2/28/2019	2nd Temp	4222213	2/25/2019	Water OVERPAYMENT	14.42
10160000	112889	2/28/2019	2nd Temp	107709	2/8/2019	Water OVERPAYMENT	78.28
10160000	112891	2/28/2019	2nd Temp	790030	2/25/2019	Refund OVERPAYMENT	16.34
10160000	112906	2/28/2019	2nd Temp	733530	2/27/2019	SANITATION REFUND OVERPAYMENT	17.33
10160000	112916	2/28/2019	2nd Temp	10112204	2/22/2019	Water OVERPAYMENT	36.72
							$ 410.34
Liability Accounts							
10202000	112795	2/21/2019	ARIZONA STATE TREASURER	Jan-19	2/14/2019	STATE JCEF	380.89
10202500	112795	2/21/2019	ARIZONA STATE TREASURER	Jan-19	2/14/2019	ZFAR 1	867.99
10202501	112795	2/21/2019	ARIZONA STATE TREASURER	Jan-19	2/14/2019	ZFAR2	213.03
10203000	112836	2/21/2019	PINAL COUNTY TREASURER	JAN/19 REMIT	1/1/2019	JANUARY STATE REMIT	40.97
10204000	112795	2/21/2019	ARIZONA STATE TREASURER	Jan-19	2/14/2019	JAN STATE SURCHARGES	6,816.66
10206000	112807	2/21/2019	2nd Temp	CM2018-27	2/19/2019	BOND REFUND #CM2018-00027	294.00
10206000	112807	2/21/2019	2nd Temp	CM2018-27	2/19/2019	BOND REFUND CASE #CM2018-000027	294.00
10209000	112795	2/21/2019	ARIZONA STATE TREASURER	Jan-19	2/14/2019	Victims Rights Enforcement	99.14
10232000	112695	2/7/2019	AZ DEPT OF REVENUE COLL SVC	PPE 2/1/19	2/7/2019	LEVY	50.00
10232000	112701	2/7/2019	CAVALRY SPVI LLC	PPE 02/01/19	2/7/2019	LEVY	307.29
10232000	112731	2/7/2019	US DEPARTMENT OF EDUCATION AWG	PPE 020119	2/7/2019	LEVY	190.46
10232000	112734	2/7/2019	Village of Copper Basin Community Assoc.	PPE 2/1/19	2/7/2019	Levy	183.23
10232000	112798	2/21/2019	AZ DEPT OF REVENUE COLL SVC	PPE 02/15/19	2/20/2019	LEVY	50.00
10232000	112805	2/21/2019	CAVALRY SPVI LLC	PPE 02/15/19	2/20/2019	LEVY	307.29
10232000	112854	2/21/2019	US DEPARTMENT OF EDUCATION AWG	PPE 02/15/19	2/20/2019	LEVY	150.58
10232000	112855	2/21/2019	Village of Copper Basin Community Assoc.	PPE 02/15/19	2/20/2019	Levy	150.35
10243000	112765	2/14/2019	NEW YORK LIFE INSURANCE	FEB19-006929080 7 $	2/4/2019	FEB19 INS PREMIUM	429.37
10250038	112795	2/21/2019	ARIZONA STATE TREASURER	Jan-19	2/14/2019	STATE FINES	3,089.34
10260000	112774	2/14/2019	2nd Temp	FEB19 RESTITUTION	2/7/2019	ReSTITUTION M1141CM2017000179	100.00
10260000	112813	2/21/2019	2nd Temp	FEB19-RESTI	2/19/2019	ReSTITUTION PMT CM2018-000162	50.00
10260000	112816	2/21/2019	2nd Temp	FEB REST/CM2018-0176	2/19/2019	ReSTITUION PMT CM2018-0000176	250.00
10260000	112820	2/21/2019	2nd Temp	FEB/19 RESTI	2/19/2019	ReSITUTION PMT CASE #CM2017-000075	30.00
10260000	112850	2/21/2019	2nd Temp	FEB REST - CM2018	2/19/2019	ReSTITUTION PMT CM2018-000176	80.63
							$ 14,425.22
Revenue Accounts							
10320211	112705	2/7/2019	2nd Temp	11.643765	1/31/2019	BUSINESS LICENSE FEE REFUND	50.00
10338465	112904	2/28/2019	2nd Temp	RECORDS REIMB 2/19	2/21/2019	Refund for copies of record-paid for but determined from another jurisdiction	6.00
10339471	112875	2/28/2019	2nd Temp	2000586.002	2/20/2019	Refund FOR GALLAGHER TOURNAMENT	270.00
10339603	112784	2/21/2019	2nd Temp	2000583.002	2/15/2019	Refund FOR 5-BALL REGISTRATION	35.00
10339604	112831	2/21/2019	2nd Temp	20008585	2/19/2019	Refund FOR FEB/19 ZUMBA CLASS	20.00
10339604	112832	2/21/2019	2nd Temp	2000585.002	2/20/2019	Refund FOR FEB/19 ZUMBA CLASS	20.00
10340578	112763	2/14/2019	JANET MANNATO	JAN19 PDS1627	2/7/2019	JANUARY 2019 PUBLIC DEFENDER SVC	1,400.00
							$ 1,801.00
Town Council							
10501205	112869	2/28/2019	Casa Grande Valley Newspaper Inc.	27350-3017	1/24/2019	Public Notice - Board/Commission Openings 1/17 and 1/24	168.30
10501205	112869	2/28/2019	Casa Grande Valley Newspaper Inc.	28686-3017	2/7/2019	Silver King Market Place RFP for Lease - cancelled after two publications	50.49
10501301	119	2/15/2019	LANE AWARD MANUFACTURING	013119 STMT	1/11/2019	Name badges	13.62
10501401	119	2/15/2019	National League of	013119 STMT	1/24/2019	Membership Renewal	1,916.83
10501402			CENTRAL AZ COLLEGE	14791421	12/3/2018	Catering for the Council Swearing-In Ceremony event	
10501402	119	2/15/2019	CIRCLE K #2938	013119 STMT	1/2/2019	Staff training on Board of Appeals - lunch	15.15
10501402	119	2/15/2019	Dollar General	013119 STMT	1/2/2019	Council Meetings	14.54
10501402	119	2/15/2019	Pinal Partnership	013119 STMT	1/4/2019	January Breakfast Meeting for Judy Hughes and Ben Bitter	20.00
10501402	119	2/15/2019	Subway	013119 STMT	1/14/2019	Council E-session Meeting	25.86
10501402	119	2/15/2019	Subway	013119 STMT	1/14/2019	E-session meeting	13.96
10501402	119	2/15/2019	Subway	013119 STMT	1/14/2019	E-session meeting	17.43
10501402	119	2/15/2019	WALMART COMMUNITY # 0005 7118	013119 STMT	1/13/2019	Water for Council Meeting	4.10
10501402	112455	Multiple	CENTRAL AZ COLLEGE	14791421	12/3/2018	Catering for the Council Swearing-In Ceremony event	-
							$ 2,260.28
Administration							
10502201	112912	2/28/2019	Verizon Wireless	9822710235	1/21/2019	ADMIN-B BITTER	36.74
10502207	112773	2/14/2019	T-MOBILE USA INC.	963909586	2/1/2019	Sync-up (GPS)	27.82
10502231	112827	2/21/2019	KS STATEBANK	CONTR 12.05.18	2/5/2019	CONTRACT PAYMENT FOR NEW COPIERS	150.75
10502301	112720	2/7/2019	OFFICE DEPOT INC	2.47634E+11	1/30/2019	Envelopes	39.95
10502306	112737	2/7/2019	WEX BANK	57654083	1/31/2019	JAN FUEL-ADMIN	38.23
10502402	119	2/15/2019	Dragon City	013119 STMT	1/26/2019	Economic Development Lunch meeting	30.00
10502402	119	2/15/2019	Florence Cafe	013119 STMT	1/3/2019	Council Retreat Pre-meeting lunch meeting	38.00
10502402	119	2/15/2019	Pinal Partnership	013119 STMT	1/4/2019	January Breakfast Meeting for Judy Hughes and Ben Bitter	20.00
10502402	119	2/15/2019	Pinal Partnership	013119 STMT	1/16/2019	January Breakfast meeting - Brent Billingsley	20.00
10502402	119	2/15/2019	Subway	013119 STMT	1/2/2019	Staff training on Board of Appeals - lunch	46.76
10502402	119	2/15/2019	Subway	013119 STMT	1/14/2019	Council E-session Meeting	9.50

	10502402	119	2/15/2019	Subway	013119 STMT	1/14/2019	E-session meeting	8.00
								$ 465.75
Courts								
	10503234	112766	2/14/2019	PINAL CO SHERIFF'S OFFICE	1514	1/9/2019	DECEMBER SERVICES	3,512.03
	10503234	112766	2/14/2019	PINAL CO SHERIFF'S OFFICE	1561	2/5/2019	JANUARY SERVICES	4,948.45
								$ 8,460.48
Legal								
	10504205	112869	2/28/2019	Casa Grande Valley Newspaper Inc.	2048-01192048	1/30/2019	LEGAL PUBLICATIONS CREDIT ACCT#3017	(573.90)
	10504217	112876	2/28/2019	DICKINSON WRIGHT PLLC	1341394	2/12/2019	legal services : ACC/Johnson Utilities	2,275.00
	10504217	112885	2/28/2019	Gust Rosenfeld P.L.C.	346041	2/21/2019	legal services: Environmental Appeals Jan 2019	33,248.30
	10504301	112720	2/7/2019	OFFICE DEPOT INC	2.36671E+11	11/27/2018	office supplies: planner	23.27
	10504401	119	2/15/2019	STATE BAR OF ARIZONA	013119 STMT	1/30/2019	State Bar Fees for Town Attorney	505.00
	10504401	112717	2/7/2019	LEXIS NEXIS	3091861278	1/31/2019	legal research Jan 2019	219.76
	10504401	112830	2/21/2019	LEXIS NEXIS	3091815303	12/31/2018	legal research Decemeber 2018	219.76
								$ 35,917.19
Finance								
	10505202	112713	2/7/2019	Infosend	147074	12/31/2018	Contractual services	2,857.36
	10505207	112773	2/14/2019	T-MOBILE USA INC.	963909586	2/1/2019	Sync-up (GPS)	13.91
	10505207	112773	2/14/2019	T-MOBILE USA INC.	963909586	2/1/2019	Sync-up (GPS)	69.55
	10505231	112827	2/21/2019	KS STATEBANK	CONTR 12.05.18	2/5/2019	CONTRACT WITH AOT FOR MULTI-FUNCTION COPY MACHINESCONTRACT PAYMENT FOR NEW COPIERS	273.60
	10505301	112772	2/14/2019	Staples Business Advantage	7209930738-0-3	12/27/2018	Office Supplies	47.62
	10505301	112772	2/14/2019	Staples Business Advantage	7209930738-0-5	12/27/2018	Office Supplies	14.35
	10505301	112844	2/21/2019	Staples Business Advantage	1622740546	2/14/2019	Office Supplies	124.76
	10505401	112759	2/14/2019	FLORENCE TOASTMASTERS	4.19-9.19 JM DUES	2/6/2019	JOAN MILLER 6 MONTH DUES	45.00
	10505401	112882	2/28/2019	GOVERNMENT FINANCE	119125	1/15/2019	Individual Membership	150.00
	10505403	119	2/15/2019	SkillPath Seminars	013119 STMT	1/1/2019	Credit for Training Cancelled due to injury (Utility Supervisor)	(274.00)
	10505403	112785	2/21/2019	ALLESSANDRA ALLEN	2019 DOR TRNG/AA	2/11/2019	Per Diem and Travel for AzDOR Auditor Training Feb 11-12, 2019	56.00
	10505403	112804	2/21/2019	CASELLE INC.	92795	1/21/2019	Arizona User Group 2019 Registration Fees	100.00
	10505403	112898	2/28/2019	PENNEY HUBBARD	02.20.19	2/19/2019	TRAVEL/MILEAGE REIMBURSEMENT FOR 2019 CASELLE USER GROUP TRAINING - TUCSON	71.92
								3,550.07
	10508201	112912	2/28/2019	Verizon Wireless	9822710235	1/21/2019	ADMIN-S. BARBER	21.58
	10508217	112698	2/7/2019	Benefit Intelligence Inc. (ConsultADoc)	22150	2/1/2019	Monthly Teledoc Services	570.00
	10508217	112712	2/7/2019	INFINISOURCE INC.	90347084	1/9/2019	Monthly Administrative Fee-FSA	267.30
	10508217	112819	2/21/2019	GABRIEL & ASHWORTH P.L.L.C.	6030	2/3/2019	INVESTIGATIVE SERVICES	935.00
	10508314	112913	2/28/2019	WALMART COMMUNITY # 0005 7118	7118/JAN-19	2/16/2019	January and February Service Award Visa gift cards	164.82
	10508402	112841	2/21/2019	SCOTT BARBER	020419 BARBER	2/4/2019	TRAVEL REIMBURSEMENT ACMA 2019 WINTER CONFERENCE	772.54
								$ 2,731.24
Community Development								
	10510201	112912	2/28/2019	Verizon Wireless	9822710235	1/21/2019	COMMUNITY DEV/DEV SVC	210.82
	10510207	112773	2/14/2019	T-MOBILE USA INC.	963909586	2/1/2019	Sync-up (GPS)	27.82
	10510215	112693	2/7/2019	ARIZONA PUBLIC SERVICE	8742601000 JAN19	2/4/2019	224 W 20TH ST	435.07
	10510215	112771	2/14/2019	SOUTHWEST GAS CORPORATION	FEB19-MISC	2/1/2019	200 W 20TH ST	108.13
	10510217	112761	2/14/2019	HUB Planning & Urban Design LLC	1904	2/6/2019	PERSONAL VEHICLE TRAVEL FOR CONSULTANT	70.76
	10510217	112761	2/14/2019	HUB Planning & Urban Design LLC	1904	2/6/2019	PLANNING CONSULTANT FOR JAN 2019	1,200.00
	10510217	112872	2/28/2019	COLIBRYN	44	2/5/2019	Professional Services for Permit Tech	785.00
	10510217	112872	2/28/2019	COLIBRYN	44	2/5/2019	TEMP PERMIT CONSULTANT	1,195.00
	10510217	112872	2/28/2019	COLIBRYN	45	2/11/2019	Professional Services for Permit Tech 02/04/19-02/08/19	2,475.00
	10510217	112872	2/28/2019	COLIBRYN	46	2/19/2019	Professional Services for Permit Tech 02/11/19-02/15/19	2,365.00
	10510217	112872	2/28/2019	COLIBRYN	49	2/21/2019	Professional Services for Permit Tech 02/19/19-02/22/19	1,265.00
	10510231	112827	2/21/2019	KS STATEBANK	CONTR 12.05.18	2/5/2019	CONTRACT PAYMENT FOR NEW COPIERS	209.75
	10510301	119	2/15/2019	AMAZON.COM	013119 STMT	1/4/2019	Tote Organizer and Four (4) Clipboards	115.39
	10510301	119	2/15/2019	AMAZON.COM	013119 STMT	1/4/2019	Two (2) Boot Scrapers	54.28
	10510301	119	2/15/2019	AMAZON.COM	013119 STMT	1/8/2019	Replacement Phone Holster	25.99
	10510301	119	2/15/2019	LANE AWARD MANUFACTURING	013119 STMT	1/11/2019	Name badges	205.26
	10510301	112720	2/7/2019	OFFICE DEPOT INC	2.59742E+11	1/24/2019	FILE FOLDERS & TISSUES	119.77
	10510301	112720	2/7/2019	OFFICE DEPOT INC	2.61055E+11	1/17/2019	LABELS & MAGNIFIERS	85.60
	10510301	112720	2/7/2019	OFFICE DEPOT INC	2.61059E+11	1/17/2019	MAGNIFIERS	23.22
	10510301	112720	2/7/2019	OFFICE DEPOT INC	265655875-001	1/17/2019	6 CASES OF PAPER	214.96
	10510301	112835	2/21/2019	OFFICE DEPOT INC	2.68226E+11	2/1/2019	office supplieS FOR COM DEV	55.32
	10510301	112835	2/21/2019	OFFICE DEPOT INC	2.68229E+11	2/1/2019	SELF INK STAMP	41.03
	10510301	112844	2/21/2019	Staples Business Advantage	7211210653-0-2	1/9/2019	2019 RECORDS FILING	27.37
	10510301	112844	2/21/2019	Staples Business Advantage	821120653-0-1	1/9/2019	2019 RECORDS REENTION AND FILING	151.22
	10510306	112737	2/7/2019	WEX BANK	57654083	1/31/2019	JAN FUEL-COM DEV	133.24
	10510308	119	2/15/2019	International Code Council	013119 STMT	1/9/2019	Code Books for Community Development	313.29
	10510308	119	2/15/2019	International Code Council	013119 STMT	1/18/2019	Code Books for Community Development	374.08
	10510335	112844	2/21/2019	Staples Business Advantage	72010440544-0-1	12/26/2018	FILE CABINETS (2)	412.77
	10510335	112844	2/21/2019	Staples Business Advantage	7210440544-0-2	12/26/2018	OFFICE CHAIR	163.19
	10510403	119	2/15/2019	FRED PRYOR SEMINARS	013119 STMT	1/10/2019	Fred Pryor Training: PW employees C. Williams / J. Pitts Supervising Negative Behaviors	24.75
	10510408	119	2/15/2019	ONLINE STORES LLC	013119 STMT	1/9/2019	Safety Gear-hardhats	69.63

10510408	112778	2/14/2019	WATER SHED	40003	2/11/2019	BPO FOR WATER AND ICE		13.16
10510408	112914	2/28/2019	WATER SHED	15296	1/28/2019	BPO FOR WATER AND ICE		13.16
							$	12,984.03
Police Administration								
10511201	112753	2/14/2019	COX BUSINESS	FEB19/VAR	1/28/2019	425 N PINAL ST		12.56
10511201	112912	2/28/2019	Verizon Wireless	9822710235	1/21/2019	POLICE ADMIN		1,548.63
10511201	112912	2/28/2019	Verizon Wireless	9822710235	1/21/2019	Superior Fire		91.97
10511215	112693	2/7/2019	ARIZONA PUBLIC SERVICE	8742601000 JAN19	2/4/2019	1817 N HUNT HWY 50%		70.36
10511215	112693	2/7/2019	ARIZONA PUBLIC SERVICE	8742601000 JAN19	2/4/2019	193 E 6 ST		72.74
10511215	112693	2/7/2019	ARIZONA PUBLIC SERVICE	8742601000 JAN19	2/4/2019	425 N PINAL ST PD		1,010.66
10511215	112801	2/21/2019	BIA	JAN19/VAR	2/5/2019	3949 N IOWA RADIO TOWER #2		316.48
10511217	112726	2/7/2019	SHRED-IT USA	8126413281	1/28/2019	Shred-it cost		68.00
10511301	119	2/15/2019	AMAZON.COM	013119 STMT	1/24/2019	Duplex Desk Scanner for Laserfiche Project		458.63
10511302	112914	2/28/2019	WATER SHED	30030	2/4/2019	Ice for PD		27.43
10511306	112737	2/7/2019	WEX BANK	57654083	1/31/2019	JAN FUEL-PD ADMIN		198.16
10511401	112818	2/21/2019	Friends of Apache Junction	2019 PCLEA DUES	1/31/2019	PCLEA dues for Chief Hughes		100.00
10511402	112908	2/28/2019	TERRY TRYON	13449	1/17/2019	Reimbursement for food purchased during search warrant for team		25.34
							$	4,000.96
Police Support								
10512215	112693	2/7/2019	ARIZONA PUBLIC SERVICE	8742601000 JAN19	2/4/2019	200E 6TH ST		2,528.36
10512215	112771	2/14/2019	SOUTHWEST GAS CORPORATION	FEB19-MISC	2/1/2019	200 E 6TH ST.		53.58
10512217	112900	2/28/2019	PINAL CO ANIMAL CARE & CONTROL	18-Sep	2/22/2019	Monthly Animal Control Billing: October 2018		227.27
10512217	112900	2/28/2019	PINAL CO ANIMAL CARE & CONTROL	18-Sep	2/22/2019	Monthly Billing Animal Control: Sept.2018		562.65
							$	3,371.86
Police Volunteer								
10513306	112737	2/7/2019	WEX BANK	57654083	1/31/2019	JAN FUEL - PD VOLUNTEER		55.31
							$	55.31
Police Operations								
10514209	112702	2/7/2019	Day Auto Supply Inc	764324	1/22/2019	STOCK FILTERS & OIL FOR PD		83.28
10514209	112702	2/7/2019	Day Auto Supply Inc	764659	1/25/2019	ADHISIVE REMOVER FOR PD 330FD		29.72
10514209	112709	2/7/2019	FLORENCE TRUE VALUE HARDWARE	240587	2/1/2019	SCREWS FOR PD 4110EN (TRAILER)		8.46
10514209	112739	2/14/2019	A Secure Towing LLC	17632	1/13/2019	Towing for PD G-236DY		155.00
10514209	112755	2/14/2019	Day Auto Supply Inc	765244	2/1/2019	WHEEL HUB BEARING FOR PD G-921GL		493.50
10514209	112755	2/14/2019	Day Auto Supply Inc	765272	2/1/2019	WIPER BLADES FO PD G-044FM		17.45
10514209	112874	2/28/2019	Day Auto Supply Inc	765440	2/4/2019	STOCK OIL, FILTERS, BEARINGS, BRAKES FOR PD		904.27
10514209	112874	2/28/2019	Day Auto Supply Inc	766709	2/19/2019	STOCK OIL & FILTERS FOR PD		50.25
10514209	112874	2/28/2019	Day Auto Supply Inc	766828	2/20/2019	Battery for FD G-964GH		190.00
10514209	112894	2/28/2019	JONES AUTO CENTER	175676	2/1/2019	Credit		(38.22)
10514210	112896	2/28/2019	MOTOROLA SOLUTIONS INC.	16036660	2/8/2019	Batteries for Radio Maint.(10)		1,131.97
10514217	119	2/15/2019	2nd Temp	013119 STMT	1/21/2019	AZ Law Enforcement Accreditation Program		500.00
10514302	119	2/15/2019	2nd Temp	013119 STMT	1/23/2019	Purchase Cbl*easeus Software Data Recovery for OPS use		76.39
10514302	112902	2/28/2019	Right of Way Inc	43733	2/19/2019	Temp.No Parking Signs		338.97
10514304	112905	2/28/2019	Skaggs Companies Inc.	3137170 R1	2/11/2019	Uniforms for Sutton-Academy		822.11
10514306	112737	2/7/2019	WEX BANK	57654083	1/31/2019	JAN FUEL-PD OPERATIONS		7,757.48
10514307	119	2/15/2019	CHEWY.COM	013119 STMT	1/5/2019	Purchase Chewy.Com K9 supplies/food		696.41
10514403	112719	2/7/2019	NORTHWESTERN UNIVERSITY	13053	1/25/2019	Registration for Training: Sgt. Riccomini: 4/19-6/19 School of Police Staff & Command		4,300.00
10514403	112721	2/7/2019	PHILLIP J. RICCOMINI II	2019 PER DIEM	2/7/2019	Per Diem for Training: 4/1-6/7/2019		735.00
							$	18,252.04
Fire Administration								
10515201	112912	2/28/2019	Verizon Wireless	9822710235	1/21/2019	FIRE ADMIN		666.94
10515209	112755	2/14/2019	Day Auto Supply Inc	765761	2/7/2019	OIL FILTERS FOR PD G-964GH		45.86
10515209	112874	2/28/2019	Day Auto Supply Inc	767144	2/25/2019	CREDIT FOR RETURN		(19.66)
10515215	112693	2/7/2019	ARIZONA PUBLIC SERVICE	8742601000 JAN19	2/4/2019	1817 N HUNT HWY 50%		70.35
10515215	112693	2/7/2019	ARIZONA PUBLIC SERVICE	8742601000 JAN19	2/4/2019	72.E 1ST		1,120.44
10515215	112771	2/14/2019	SOUTHWEST GAS CORPORATION	FEB19-MISC	2/1/2019	72 E 1st Street		74.66
10515231	112827	2/21/2019	KS STATEBANK	CONTR 12.05.18	2/5/2019	CONTRACT PAYMENT FOR NEW COPIERS		204.91
10515306	112737	2/7/2019	WEX BANK	57654083	1/31/2019	JAN FUEL-FIRE ADMIN		820.87
10515401	112692	2/7/2019	ARIZONA FIRE CHIEFS ASSOC	300003512	12/8/2018	Annual membership for Strayer		75.00
10515401	112815	2/21/2019	FIRE CHIEFS ASSOC OF PINAL CO	2019	1/1/2019	CHIEF STRAYER Dues for Association		25.00
							$	3,084.37
Fire Station #1								
10516209	112718	2/7/2019	Manatee Tire & Auto Inc. dba	185595	1/29/2019	6 TIRES FOR FD346ES		1,254.39
10516209	112718	2/7/2019	Manatee Tire & Auto Inc. dba	185623	1/29/2019	6 TIRES FOR FD 001FM		772.84
10516209	112809	2/21/2019	Day Auto Supply Inc	765539	2/5/2019	lamp		5.78
10516209	112809	2/21/2019	Day Auto Supply Inc	765809	2/7/2019	DEF for apparatus		19.63
10516302	112709	2/7/2019	FLORENCE TRUE VALUE HARDWARE	240460	1/24/2019	nuts, bolts, screws		5.55
10516302	112817	2/21/2019	FLORENCE TRUE VALUE HARDWARE	240824	2/14/2019	BATTERIES FOR STATION #1		14.79
10516302	112839	2/21/2019	ROADRUNNER OXYGEN SVC	78489	2/7/2019	Cylinder refill		27.77
10516306	112737	2/7/2019	WEX BANK	57654083	1/31/2019	JAN FUEL-FIRE 541		1,068.66
10516312	112756	2/14/2019	DIVERSIFIED INSPECTIONS	IND15190	1/31/2019	ladder inspections performed annually		1,190.00
10516315	112915	2/28/2019	WAXIE SANITARY SUPPLY	78059825	2/12/2019	Janitorial Supplies St #1		554.90
10516335	119	2/15/2019	HOME DEPOT CREDIT SERVICES	013119 STMT	1/4/2019	Other Credits Sale Reversal this is the credit for the double billing from last month.		(414.95)
10516335	119	2/15/2019	WALMART COMMUNITY # 0005 7118	013119 STMT	1/11/2019	Purchase Wal-Mart #4451 bowls, plates, forks for station #2		38.33
10516335	112736	2/7/2019	WAXIE SANITARY SUPPLY	78009180	1/22/2019	station #1 replacement vacuum		352.28
10516403	119	2/15/2019	Temporary Vendor	013119 STMT	1/15/2019	Hotel Booking Fee From 3rd party (unaware of 3rd party status or fee)		9.99

							ordered more than the incorrect quote, plus shipping	
	10516403	112861	2/28/2019	AMERICAN SAFETY & HEALTH INST	135744	1/29/2019	and tax this is a supplimental po to 51445	64.96
	10516403	112903	2/28/2019	RUMDOUL IN	233701	2/15/2019	book for burn safety class 2-19 to 2-21	67.58
								$ 5,032.50
Fire Station #2								
	10517201	112753	2/14/2019	COX BUSINESS	FEB19/VAR	1/28/2019	2035 N HUNT HWY	109.93
	10517212	112893	2/28/2019	Johnson Utilities	19-Feb	2/5/2019	water for station #2	28.69
	10517212	112893	2/28/2019	Johnson Utilities	19-Feb	2/5/2019	water/SEWER STATION #2	269.18
	10517215	112693	2/7/2019	ARIZONA PUBLIC SERVICE	8742601000 JAN19	2/4/2019	2035 N HUNT HWY	708.49
	10517215	112771	2/14/2019	SOUTHWEST GAS CORPORATION	FEB19-MISC	2/1/2019	2035 N HUNT HWY	113.45
	10517304	112777	2/14/2019	UNITED FIRE EQUIPMENT CO.	700254	1/22/2019	Uniform allowance - WOHLFORTH	177.23
	10517304	112910	2/28/2019	UNITED FIRE EQUIPMENT CO.	701554	2/6/2019	Uniform allowance for WETHERBEE	197.67
	10517306	112737	2/7/2019	WEX BANK	57654083	1/31/2019	JAN FUEL-FIRE 542	720.90
	10517312	112756	2/14/2019	DIVERSIFIED INSPECTIONS	IND15190	1/31/2019	ladder INSPECTIONS BOTH ARIAL & GROUND	1,190.00
	10517312	112884	2/28/2019	GULF COAST BANK & TRUST COMPANY	959	2/15/2019	turn out cleaning and repair 6 pair	1,107.50
	10517314	112689	2/7/2019	ACE Fitness	4012	1/29/2019	clean and repair step mill and pull down machine	436.58
	10517315	112915	2/28/2019	WAXIE SANITARY SUPPLY	78059826	2/12/2019	Janitorial Supplies St #2	399.08
	10517321	119	2/15/2019	WALMART COMMUNITY # 0005 7118	013119 STMT	1/17/2019	Purchase Wal-Mart #2778 locks and hooks for drug boxes	36.98
	10517321	112741	2/14/2019	AMERICAN SAFETY & HEALTH INST	1036832	1/29/2019	Loop CPR system (2)	363.11
	10517321	112860	2/28/2019	Allied 100 (dba AEDSuperstore)	1014148	2/8/2019	upgrade to town wide AEDs to latest version of AHA guidelines for CPR.	179.03
	10517321	112865	2/28/2019	BANNER IRONWOOD MEDICAL CENTER	19-Jan	2/10/2019	medical supplies	54.00
	10517321	112899	2/28/2019	Physio- Control Inc.	119009487	2/5/2019	LANDSCAPE BATTERIES	313.95
	10517403	112861	2/28/2019	AMERICAN SAFETY & HEALTH INST	135744	1/29/2019	ASHI ACLS and CPR Cards	331.57
								$ 6,737.34
Information Technology								
	10519201	112912	2/28/2019	Verizon Wireless	9822710235	1/21/2019	IT/COUNCIL LAPTOPS	409.70
	10519201	112912	2/28/2019	Verizon Wireless	9822710235	1/21/2019	NO-COST CENTER-IT	269.76
	10519207	119	2/15/2019	ADOBE SYSTEMS INCORPORATED	013119 STMT	1/30/2019	Adobe Creative Cloud Subscription	57.87
	10519207	119	2/15/2019	COMODO	013119 STMT	1/23/2019	Comodo SSL Certificate for florenceaz.gov	141.31
	10519207	119	2/15/2019	RAMNODE.COM	013119 STMT	1/22/2019	Town Website Hosting (florenceaz.gov/ridethecart.com)	83.00
	10519207	119	2/15/2019	SendGrid	013119 STMT	1/1/2019	Town Website Email Marketing (florenceaz.gov)	14.95
	10519207	112773	2/14/2019	T-MOBILE USA INC.	963909586	2/1/2019	Sync-up (GPS)	27.82
	10519207	112828	2/21/2019	KTS Networks	982469	1/16/2019	Annual ShoreTel Support Agreement	8,416.00
	10519211	119	2/15/2019	AMAZON.COM	013119 STMT	1/28/2019	Milandr - Standoff mounting brackets for LoRaWAN install	127.45
	10519217	112794	2/21/2019	Arizona Office of Technology	IN538301	1/23/2019	Managed Print Services Contract: CN9293-01	1,044.96
	10519222	112753	2/14/2019	COX BUSINESS	FEB19/VAR	1/28/2019	775 N MAIN ST	33.54
	10519301	119	2/15/2019	Vistaprint Netherlands B.V.	013119 STMT	1/23/2019	Victor Cantu - GIS Coordinator - Business Cards	20.99
	10519306	112737	2/7/2019	WEX BANK	57654083	1/31/2019	JAN FUEL-IT	45.55
	10519323	119	2/15/2019	Microsoft Corporation	013119 STMT	1/2/2019	Office 365 Subscription	677.59
								$ 11,370.49
Parks & Recreation Administration								
	10520215	112693	2/7/2019	ARIZONA PUBLIC SERVICE	8742601000 JAN19	2/4/2019	133 N MAIN ST	255.66
	10520215	112771	2/14/2019	SOUTHWEST GAS CORPORATION	FEB19-MISC	2/1/2019	133 N MAIN ST	46.15
	10520302	112856	2/21/2019	WATER SHED	550742	1/14/2019	Drinking water for Community Center Staff	19.75
								$ 321.56
	10521207	112773	2/14/2019	T-MOBILE USA INC.	963909586	2/1/2019	Sync-up (GPS)	97.37
	10521231	112827	2/21/2019	KS STATEBANK	CONTR 12.05.18	2/5/2019	CONTRACT PAYMENT FOR NEW COPIERS	209.75
	10521301	119	2/15/2019	AMAZON.COM	013119 STMT	1/10/2019	Monitors and Dual Monitor Stands	676.78
	10521301	112835	2/21/2019	OFFICE DEPOT INC	2.55685E+11	1/8/2019	HEAVY DUTY STAPLER FILE FOLDERS	61.44
	10521301	112835	2/21/2019	OFFICE DEPOT INC	2.60027E+11	1/15/2019	ADDRESS LABELS AND DESKTOP CALENDAR	30.22
	10521301	112835	2/21/2019	OFFICE DEPOT INC	2.62466E+11	1/21/2019	PAPER TOWELS, TISSUE, PENS, EASEL PAPER, LABELS	161.94
	10521335			MATERIAL PROMOTIONS INC.	80004656	11/30/2018	Over the Street Banner Christmas on Main	
	10521335	119	2/15/2019	MATERIAL PROMOTIONS INC.	013119 STMT	1/9/2019	Over-the-Street Banner - Christmas on Main	1,350.00
	10521335	112547	Multiple	MATERIAL PROMOTIONS INC.	80004656	11/30/2018	Over the Street Banner Christmas on Main	
	10521403	119	2/15/2019	ARIZONA PARKS AND	013119 STMT	1/14/2019	Registration fee for activenet user group meeting	30.00
	10521444	112848	2/21/2019	SURF & SKI ENTERPRISES	153266	1/22/2019	Hoodies for FTC	600.00
								$ 3,217.50
Parks								
	10522201	112912	2/28/2019	Verizon Wireless	9822710235	1/21/2019	PARKS MAINT	227.97
	10522207	112796	2/21/2019	Arizona's Best Choice Pest & Termite Svc	618797	1/7/2019	Gopher control at Heritage, Senior Center and Little League park	235.00
	10522207	112796	2/21/2019	Arizona's Best Choice Pest & Termite Svc	619163	1/14/2019	Gopher control at Heritage, Senior Center and Little League park	235.00
	10522207	112796	2/21/2019	Arizona's Best Choice Pest & Termite Svc	619510	1/21/2019	Gopher control at Heritage, Senior Center and Little League park	235.00
	10522209	112755	2/14/2019	Day Auto Supply Inc	765760	2/7/2019	OIL & FILTERS FOR PR-9	41.87
	10522215	112693	2/7/2019	ARIZONA PUBLIC SERVICE	8742601000 JAN19	2/4/2019	121 W 22 ST PARK	118.67
	10522215	112693	2/7/2019	ARIZONA PUBLIC SERVICE	8742601000 JAN19	2/4/2019	208 E 8TH ST	98.39
	10522215	112693	2/7/2019	ARIZONA PUBLIC SERVICE	8742601000 JAN19	2/4/2019	28 E 11TH ST	96.30
	10522215	112693	2/7/2019	ARIZONA PUBLIC SERVICE	8742601000 JAN19	2/4/2019	289 N MAIN ST UNIT 1-2	93.06
	10522215	112693	2/7/2019	ARIZONA PUBLIC SERVICE	8742601000 JAN19	2/4/2019	290 N BAILEY ST	65.09
	10522215	112693	2/7/2019	ARIZONA PUBLIC SERVICE	8742601000 JAN19	2/4/2019	300 W 1ST	350.29
	10522215	112693	2/7/2019	ARIZONA PUBLIC SERVICE	8742601000 JAN19	2/4/2019	364 N UNIVERSITY	117.05
	10522215	112693	2/7/2019	ARIZONA PUBLIC SERVICE	8742601000 JAN19	2/4/2019	77 W RUGGLES ST	97.00

10522222	112837	2/21/2019	RICK HALL	26519	2/1/2019	Portable Toilets for MAIN ST PARK	70.98
10522302	119	2/15/2019	COOLIDGE ACE HARDWARE	013119 STMT	1/25/2019	Irrigation repair supplies	54.71
10522302	112709	2/7/2019	FLORENCE TRUE VALUE HARDWARE	240143	1/4/2019	GLOVES AND SAFETY GLASSES	46.91
10522302	112709	2/7/2019	FLORENCE TRUE VALUE HARDWARE	240214	1/8/2019	NYLON ROPE, BREECH SNAP	52.66
10522302	112709	2/7/2019	FLORENCE TRUE VALUE HARDWARE	240247	1/10/2019	18 TRECIPRO BLADE	12.66
10522302	112709	2/7/2019	FLORENCE TRUE VALUE HARDWARE	240253	1/10/2019	RATCH SCREWDRIVER, SECURITY BIT	21.14
10522302	112709	2/7/2019	FLORENCE TRUE VALUE HARDWARE	240362	1/17/2019	SPIKE NAIL MARK PAINT	32.79
10522302	112709	2/7/2019	FLORENCE TRUE VALUE HARDWARE	240419	1/22/2019	GLOORANGESTAKE FLAG, VICTOR GOPHER TRAP	40.59
10522302	112709	2/7/2019	FLORENCE TRUE VALUE HARDWARE	240475	1/25/2019	8oz christys redhotblue pvc cement	9.82
10522302	112709	2/7/2019	FLORENCE TRUE VALUE HARDWARE	240482	1/25/2019	6 VICTOR GOPHER TRAP"	29.12
10522302	112856	2/21/2019	WATER SHED	550741	1/14/2019	Drinking water and ice for Park Maintenance Staff	13.16
10522302	112874	2/28/2019	Day Auto Supply Inc	76389	2/14/2019	INTERLCKTRILER B	13.64
10522302	112914	2/28/2019	WATER SHED	400041	2/20/2019	Drinking water for Community Center Staff	13.16
10522302	112914	2/28/2019	WATER SHED	400059	2/25/2019	Drinking water and ice for Park Maintenance Staff	6.58
10522304	112867	2/28/2019	C-A-L STORES COMPANIES INC.	457883	2/21/2019	Jeans for Park Maintenance Uniforms	1,036.96
10522306	112737	2/7/2019	WEX BANK	57654083	1/31/2019	JAN FUEL-PARKS MAINT	568.73
10522317	119	2/15/2019	HOME DEPOT CREDIT SERVICES	013119 STMT	1/28/2019	Pressure Washer	6.67
10522317	119	2/15/2019	HOME DEPOT CREDIT SERVICES	013119 STMT	1/28/2019	Pressure Washer	500.00
10522317	112792	2/21/2019	ARIZONA DEPARTMENT OF CORRECTIONS-ITA	A04116B 20190117	1/31/2019	INMATE LABOR/WORK PROGRAM	40.00
10522317	112863	2/28/2019	B & BW Enterprises Inc.	8032	2/5/2019	Weed SPRAY HERITAKE PARK	2,428.32
10522317	112863	2/28/2019	B & BW Enterprises Inc.	8033	2/7/2019	Weed preventive herbicide @ Lib/ Community Center- additional amount	431.80
10522317	112863	2/28/2019	B & BW Enterprises Inc.	8033	2/7/2019	Weed preventive herbicide @ Lib/Comm Ctr	1,996.52
10522317	112863	2/28/2019	B & BW Enterprises Inc.	8033	2/7/2019	Weed preventive herbicide @ Little League, SC, PD, FD and Dog Park	755.22
10522403	119	2/15/2019	ALCA	013119 STMT	1/11/2019	ACLP Workshops- Lopez and White	60.00
10522403	119	2/15/2019	ALCA	013119 STMT	1/11/2019	ACLP Workshops- Lopez and White	60.00
							$ 10,312.83
Community Center							
10523401	119	2/15/2019	MOOD MEDIA CORPORATE	013119 STMT	1/11/2019	Pandora Music Subscription - Library & Community Center	29.43
							$ 29.43
10524215	112693	2/7/2019	ARIZONA PUBLIC SERVICE	8742601000 JAN19	2/4/2019	174 W 1ST UNIT 2	4,216.91
10524215	112771	2/14/2019	SOUTHWEST GAS CORPORATION	FEB19-MISC	2/1/2019	174 W 1ST ST #2	90.98
10524401	119	2/15/2019	MOOD MEDIA CORPORATE	013119 STMT	1/11/2019	Pandora Music Subscription - Aquatic Center	29.43
							$ 4,337.32
Recreation Programs							
10525201	112912	2/28/2019	Verizon Wireless	9822710235	1/21/2019	RECREATION PROG	39.97
10525209	112755	2/14/2019	Day Auto Supply Inc	765865	2/8/2019	WIPE BLADES FOR PR-4	28.81
10525302	119	2/15/2019	AMAZON.COM	013119 STMT	1/4/2019	Purchase Amzn Mktp Us	24.05
10525302	119	2/15/2019	AMAZON.COM	013119 STMT	1/15/2019	Supplies for mother son dance	21.11
10525302	119	2/15/2019	AMAZON.COM	013119 STMT	1/15/2019	Supplies for mother son dance	24.24
10525302	119	2/15/2019	AMAZON.COM	013119 STMT	1/26/2019	Spring Sports Supplies	183.11
10525302	119	2/15/2019	EUGENE & KIM'S PLACE	013119 STMT	1/30/2019	Donuts for Focus Group Meeting	20.96
10525302	119	2/15/2019	JESSICA N TROTTER MBR	013119 STMT	1/17/2019	Goof Booth for FTC Event- Cupid Ball Deposit	100.00
10525302	119	2/15/2019	JESSICA N TROTTER MBR	013119 STMT	1/18/2019	Remaining goof booth payment	100.00
10525302	119	2/15/2019	pickleballcentral.com	013119 STMT	1/18/2019	Pickleball nets and tape for temporary courts	833.96
10525302	119	2/15/2019	SAFEWAY INC.	013119 STMT	1/29/2019	Snacks and refreshments for Parks& Rec. Comprehensive Plan Focus Groups	38.73
10525302	119	2/15/2019	WALMART COMMUNITY # 0005 7118	013119 STMT	1/11/2019	Supplies for Before and After the Ball program	274.01
10525302	119	2/15/2019	WALMART COMMUNITY # 0005 7118	013119 STMT	1/17/2019	Supplies for Mother son dance	132.75
10525302	119	2/15/2019	WALMART COMMUNITY # 0005 7118	013119 STMT	1/23/2019	Fall winter Sports Supplies	88.07
10525302	119	2/15/2019	WALMART COMMUNITY # 0005 7118	013119 STMT	1/28/2019	Lunch for P&R Comprehensive plan Focus Group	23.14
10525302	119	2/15/2019	WALMART COMMUNITY # 0005 7118	013119 STMT	1/28/2019	Lunch for P&R Comprehensive plan Focus Group	50.00
10525302	112714	2/7/2019	JESSICA N TROTTER MBR	143	1/1/2019	PHOTOBOOTH FOR FATHER/DAUGHTER DANCE	275.00
10525302	112714	2/7/2019	JESSICA N TROTTER MBR	145	1/31/2019	PHOTOBOOTH FOR CUPIDS BALL	200.00
10525302	112786	2/21/2019	ALONZO B. JONES	2/22/2019	2/20/2019	2019 Teen Symposium Main Speaker	1,000.00
10525302	112788	2/21/2019	ANITA L COTA	2/22/2019	2/20/2019	2019 Teen Symposium Speaker	150.00
10525302	112802	2/21/2019	BSN Sports LLC	904326940	1/25/2019	SHINGUARDS	162.36
10525302	112823	2/21/2019	JAZMINE HALL	2/22/2019	2/20/2019	2019 Teen Symposium Speaker	150.00
10525302	112824	2/21/2019	JIM HEET PHOTOGRAPHY	444	2/20/2019	pic trophies retakes	32.76
10525302	112845	2/21/2019	Strings of the Sonoran Inc	02.16.19	2/16/2019	Spring Concert @ Suter House 2/16/19 (Arts and Culture Commission)	250.00
10525302	112848	2/21/2019	SURF & SKI ENTERPRISES	153266	1/22/2019	Hoodies for FTC	600.00
10525302	112856	2/21/2019	WATER SHED	15233	1/10/2019	Drinking water for Community Center Staff	19.75
10525302	112866	2/28/2019	BSN Sports LLC	904425606	2/19/2019	JR NBA Jerseys	158.40
10525302	112892	2/28/2019	JIM HEET PHOTOGRAPHY	524	2/15/2019	Trophy Pics For T-ball	485.94
10525302	112892	2/28/2019	JIM HEET PHOTOGRAPHY	525	2/15/2019	Trophy pics for soccer	131.04
10525306	112737	2/7/2019	WEX BANK	57654083	1/31/2019	JAN FUEL-P&R	204.02
10525403	119	2/15/2019	ARIZONA PARKS AND	013119 STMT	1/14/2019	Registration fee for Active Net User Group Meeting.	20.00
							$ 5,822.18
Special Events							
10526222	119	2/15/2019	Dunn Transportation dba	013119 STMT	1/7/2019	Trolley Rental for Historic Home Tour 2019	1,308.45
10526222	112811	2/21/2019	Dunn Transportation dba	100851	2/11/2019	Trolley Rental for Historic Home Tour 2019	1,409.13
10526302	119	2/15/2019	AMAZON.COM	013119 STMT	1/11/2019	Supplies for FTC Haunted House	21.98
10526302	112869	2/28/2019	Casa Grande Valley Newspaper Inc.	2048-01192048	1/30/2019	additional amount for 2019 Home Tour Booklet printing.	339.09
10526302	112869	2/28/2019	Casa Grande Valley Newspaper Inc.	2048-01192048	1/30/2019	Printing 2019 Home Tour Booklet	1,248.50
10526407	119	2/15/2019	Facebook	013119 STMT	1/1/2019	Facebook Ad for Christmas on Main Street	21.12
10526407	112849	2/21/2019	The Arizona Republic	R3088535150101	1/30/2019	2019 Home Tour Ad	80.50
10526407	112849	2/21/2019	The Arizona Republic	R3088535150201	1/30/2019	2019 Home Tour Ad	6.00
10526407	112851	2/21/2019	True West Publishing Inc.	2019-21462	2/1/2019	True West 1/6 page Home Tour Ad 2019	450.00
10526407	112852	2/21/2019	Tucson Local Media	17371	1/31/2019	1/4 page Home Tour Ad in Tucson Local Media	502.00
10526407	112869	2/28/2019	Casa Grande Valley Newspaper Inc.	2048-01192048	1/30/2019	CONCERTS IN THE PARK	153.00

							$	5,539.77
Senior Center								
10528201	112912	2/28/2019	Verizon Wireless	9822710235	1/21/2019	SENIOR CENTER		18.13
10528207	112773	2/14/2019	T-MOBILE USA INC.	963909583	2/1/2019	OBD11 Extension cables for GPS		260.80
10528207	112773	2/14/2019	T-MOBILE USA INC.	963909586	2/1/2019	Sync-up (GPS)		69.55
10528209	112894	2/28/2019	JONES AUTO CENTER	175912	2/14/2019	HANDLE SUPPORT FOR SC-3		100.61
10528209	112894	2/28/2019	JONES AUTO CENTER	176026	2/22/2019	Credit		(100.61)
10528209	112895	2/28/2019	Manatee Tire & Auto Inc. dba	186132	2/15/2019	2 tires for SC-16		264.80
10528211	119	2/15/2019	Dunn-Edwards	013119 STMT	1/17/2019	Paint for Senior Center Offices		271.59
10528211	112821	2/21/2019	HERBERT F. FITZPATRICK	5689	1/19/2019	Three (3) network cable runs (per IT)		453.05
10528215	112693	2/7/2019	ARIZONA PUBLIC SERVICE	8742601000 JAN19	2/4/2019	330 N PINAL ST		958.46
10528215	112771	2/14/2019	SOUTHWEST GAS CORPORATION	FEB19-MISC	2/1/2019	330 N PINAL ST		51.46
10528301	112720	2/7/2019	OFFICE DEPOT INC	2.39488E+11	11/30/2018	KRAFT OF PAPER		61.59
10528301	112720	2/7/2019	OFFICE DEPOT INC	2.39513E+11	11/30/2018	LABELS & STAPLER FOR GIVE A LIFT		18.28
10528302	119	2/15/2019	Central Arizona Chapter ICC	013119 STMT	1/9/2019	Purchase Eb Laugh With US Feat 6 tickets to Laughables Saturday 1/19/19		42.00
10528302	119	2/15/2019	OAKLAND A'S	013119 STMT	1/5/2019	Senior Center Spring Training Excursion		315.25
10528302	119	2/15/2019	OAKLAND A'S	013119 STMT	1/5/2019	Senior Center Spring Training Excursion - Additional Tickets		181.75
10528302	119	2/15/2019	SMART & FINAL STORES CORP	013119 STMT	1/20/2019	Purchase Smart And Final 730-monthly operating supplies for kitchen		403.90
10528302	119	2/15/2019	WALMART COMMUNITY # 0005 7118	013119 STMT	1/7/2019	Purchase Wm Supercenter #2778 monthly meal supplies		104.72
10528302	119	2/15/2019	WALMART COMMUNITY # 0005 7118	013119 STMT	1/18/2019	Purchase Wm Supercenter #2778-monthly operating supplies for kitchen		35.31
10528302	119	2/15/2019	WALMART COMMUNITY # 0005 7118	013119 STMT	1/20/2019	Purchase Wal-Mart #1381- monthly operating supplies for kitchen		165.62
10528302	119	2/15/2019	WALMART COMMUNITY # 0005 7118	013119 STMT	1/27/2019	Purchase Wal-Mart #2778-monthlu supplies		132.25
10528302	112720	2/7/2019	OFFICE DEPOT INC	2.44059E+11	12/7/2018	Safe for Senior Center		477.83
10528302	112834	2/21/2019	Nat'l Ctr For Safety Initiatives LLC	140488	2/1/2019	Give A Lift Background & Driving Records		64.00
10528306	112737	2/7/2019	WEX BANK	57654083	1/31/2019	JAN FUEL-SENIOR CTR		315.73
10528403	119	2/15/2019	AGTS	013119 STMT	1/10/2019	Purchase Agts, Inc. Tonya and Rhoda for seminar Managing Your Time		418.00
10528403	119	2/15/2019	Florence Fudge Company	013119 STMT	1/23/2019	Purchase Sq *florence Fudge-Orientation lunch for Give A Lift Program		95.10
10528403	119	2/15/2019	FRED PRYOR SEMINARS	013119 STMT	1/10/2019	Purchase Fredpryor Career track training for Tonya Making the Transaction from Staff to Supervisor		199.00
10528403	119	2/15/2019	WALMART COMMUNITY # 0005 7118	013119 STMT	1/23/2019	Purchase Wal-Mart #2778-supplies for volunteer orientation for Give A Lift Program		63.26
10528444	119	2/15/2019	Humane Society of So. Arizona	013119 STMT	1/18/2019	Purchase Circle K # 03492		74.17
10528444	119	2/15/2019	WALMART COMMUNITY # 0005 7118	013119 STMT	1/18/2019	Purchase Wal-Mart #2778-supplies for MOW Fundraiser		245.93
								5,761.53
Library								
10529301	119	2/15/2019	AMAZON.COM	013119 STMT	1/1/2019	Ink pads, rubber stamps, binders		47.13
10529301	119	2/15/2019	AMAZON.COM	013119 STMT	1/1/2019	Letter opener		3.74
10529302	119	2/15/2019	AMAZON.COM	013119 STMT	1/30/2019	Cardstock		70.36
10529302	119	2/15/2019	AMAZON.COM	013119 STMT	1/30/2019	Poly file folders		12.37
10529308	112746	2/14/2019	BAKER & TAYLOR BOOKS	4012448759	1/25/2019	Graphic Novels books		10.79
10529308	112746	2/14/2019	BAKER & TAYLOR BOOKS	4012448761	1/28/2019	Juv and childrens Books		49.27
10529308	112746	2/14/2019	BAKER & TAYLOR BOOKS	4012448762	1/29/2019	NonFiction Books and DVDs		24.72
10529308	112746	2/14/2019	BAKER & TAYLOR BOOKS	4012450752	1/30/2019	NonFiction Books and DVDs		17.99
10529308	112746	2/14/2019	BAKER & TAYLOR BOOKS	4012450753	1/30/2019	NonFiction Books and DVDs		17.60
10529308	112746	2/14/2019	BAKER & TAYLOR BOOKS	4012450754	1/30/2019	Fiction books/CDs		603.25
10529308	112746	2/14/2019	BAKER & TAYLOR BOOKS	4012450755	1/30/2019	NonFiction books and DVDs		283.26
10529308	112746	2/14/2019	BAKER & TAYLOR BOOKS	4012450756	1/30/2019	YA books		85.72
10529308	112746	2/14/2019	BAKER & TAYLOR BOOKS	4012450757	1/30/2019	Childrens and Juv books		285.98
10529308	112746	2/14/2019	BAKER & TAYLOR BOOKS	4021448760	1/28/2019	Fiction books and audio books		14.82
10529308	112746	2/14/2019	BAKER & TAYLOR BOOKS	T98585450	1/29/2019	NonFiction books and DVDs		141.35
10529308	112799	2/21/2019	BAKER & TAYLOR BOOKS	4012457916	2/6/2019	Fiction books/CDs		3.59
10529308	112799	2/21/2019	BAKER & TAYLOR BOOKS	4012457917	2/6/2019	YA Books		10.99
10529308	112799	2/21/2019	BAKER & TAYLOR BOOKS	4012457918	2/6/2019	Fiction books/CDs		86.56
10529308	112799	2/21/2019	BAKER & TAYLOR BOOKS	4012457919	2/6/2019	YA books		21.43
10529308	112799	2/21/2019	BAKER & TAYLOR BOOKS	4012457920	2/6/2019	Childrens and Juv books		106.60
10529308	112799	2/21/2019	BAKER & TAYLOR BOOKS	T99056090	2/5/2019	NonFiction books and DVDs		60.16
10529308	112799	2/21/2019	BAKER & TAYLOR BOOKS	T99179940	2/5/2019	NonFiction books and DVDs		82.86
10529308	112799	2/21/2019	BAKER & TAYLOR BOOKS	T99297980	2/8/2019	NonFiction books and DVDs		14.98
10529308	112799	2/21/2019	BAKER & TAYLOR BOOKS	T99374770	2/12/2019	NonFiction books and DVDs		58.46
10529308	112864	2/28/2019	BAKER & TAYLOR BOOKS	401246651	2/18/2019	YA books		21.98
10529308	112864	2/28/2019	BAKER & TAYLOR BOOKS	4012466649	2/18/2019	Fiction books/CDs		70.39
10529308	112864	2/28/2019	BAKER & TAYLOR BOOKS	4012466650	2/18/2019	NonFiction books and DVDs		17.37
10529308	112864	2/28/2019	BAKER & TAYLOR BOOKS	4012466652	2/18/2019	Childrens and Juv books		127.07
10529308	112864	2/28/2019	BAKER & TAYLOR BOOKS	40124666648	2/18/2019	Graphic Novels books		14.24
10529308	112864	2/28/2019	BAKER & TAYLOR BOOKS	4012467996	2/19/2019	NonFiction books and DVDs		23.70
10529308	112864	2/28/2019	BAKER & TAYLOR BOOKS	4012467997	2/19/2019	Childrens and Juv books		15.74
10529308	112864	2/28/2019	BAKER & TAYLOR BOOKS	4012467998	2/19/2018	NonFiction books and DVDs		249.03
10529308	112864	2/28/2019	BAKER & TAYLOR BOOKS	T99683010	2/18/2019	NonFiction books and DVDs		42.13
10529308	112864	2/28/2019	BAKER & TAYLOR BOOKS	T99869660	2/19/2019	NonFiction books and DVDs		69.71
10529401	112729	2/7/2019	The Arizona Republic	AZ0718182	1/1/2019	Annual newspaper subscription renewal		545.21
10529401	112787	2/21/2019	AMERICAN LIBRARY ASSOC	M2228132	2/15/2019	Membership dues for Gloria Moreno		42.00
							$	3,352.55
Engineering								
10530201	112912	2/28/2019	Verizon Wireless	9822710235	1/21/2019	ENGINEERING		107.79
10530207	112745	2/14/2019	Arizona Office of Technology	INS18744	11/26/2018	Overage charge for 8/30/18-11/29/18		422.65
10530306	112737	2/7/2019	WEX BANK	57654083	1/31/2019	JAN FUEL-ENGINEERING		47.82
							$	578.26
Facility Maintenance								
10531201	112912	2/28/2019	Verizon Wireless	9822710235	1/21/2019	FACILITIES		133.47
10531207	112776	2/14/2019	UNITED EXTERMINATING	DEC18/VAR	12/3/2018	AQUATIC CTR		10.00
10531207	112776	2/14/2019	UNITED EXTERMINATING	DEC18/VAR	12/3/2018	AQUATIC CTR		35.00

10531207	112776	2/14/2019	UNITED EXTERMINATING	DEC18/VAR	12/3/2018	BRUNENKANT	25.00
10531207	112776	2/14/2019	UNITED EXTERMINATING	DEC18/VAR	12/3/2018	CEMETERY RR	10.00
10531207	112776	2/14/2019	UNITED EXTERMINATING	DEC18/VAR	12/3/2018	COMMUNITY DEV	25.00
10531207	112776	2/14/2019	UNITED EXTERMINATING	DEC18/VAR	12/3/2018	FIRE STA #1	25.00
10531207	112776	2/14/2019	UNITED EXTERMINATING	DEC18/VAR	12/3/2018	FITNESS CENTER	35.00
10531207	112776	2/14/2019	UNITED EXTERMINATING	DEC18/VAR	12/3/2018	HERITAGE PARK RR	25.00
10531207	112776	2/14/2019	UNITED EXTERMINATING	DEC18/VAR	12/3/2018	HIGH PROFILE RR	10.00
10531207	112776	2/14/2019	UNITED EXTERMINATING	DEC18/VAR	12/3/2018	IT OFFICES	25.00
10531207	112776	2/14/2019	UNITED EXTERMINATING	DEC18/VAR	12/3/2018	JACQUES SQUARE	10.00
10531207	112776	2/14/2019	UNITED EXTERMINATING	DEC18/VAR	12/3/2018	LIBRARY/COM CENTER	80.00
10531207	112776	2/14/2019	UNITED EXTERMINATING	DEC18/VAR	12/3/2018	MC FARLAND STATE PARK	25.00
10531207	112776	2/14/2019	UNITED EXTERMINATING	DEC18/VAR	12/3/2018	PADILLA PARK RR	10.00
10531207	112776	2/14/2019	UNITED EXTERMINATING	DEC18/VAR	12/3/2018	PARKS GROUNDS	25.00
10531207	112776	2/14/2019	UNITED EXTERMINATING	DEC18/VAR	12/3/2018	PD ADMIN	35.00
10531207	112776	2/14/2019	UNITED EXTERMINATING	DEC18/VAR	12/3/2018	PUBLIC WORKS	45.00
10531207	112776	2/14/2019	UNITED EXTERMINATING	DEC18/VAR	12/3/2018	SENIOR CENTER	35.00
10531207	112776	2/14/2019	UNITED EXTERMINATING	DEC18/VAR	12/3/2018	SILVER KING	25.00
10531207	112776	2/14/2019	UNITED EXTERMINATING	DEC18/VAR	12/3/2018	TOWN HALL	50.00
10531207	112800	2/21/2019	BENSON SYSTEMS	208155	11/16/2018	NOV PD EVIDENCE	24.95
10531207	112800	2/21/2019	BENSON SYSTEMS	208156	11/16/2018	NOV TOWN HALL	74.90
10531207	112800	2/21/2019	BENSON SYSTEMS	208157	11/16/2018	NOV COMMUNITY DEV	35.95
10531207	112800	2/21/2019	BENSON SYSTEMS	208158	11/16/2018	NOV IT BLDG	44.95
10531207	112800	2/21/2019	BENSON SYSTEMS	208159	11/16/2018	NOV ANTHEM FD 2	39.95
10531207	112800	2/21/2019	BENSON SYSTEMS	208160	11/16/2018	NOV SWWTP	32.95
10531207	112800	2/21/2019	BENSON SYSTEMS	208161	11/16/2018	NOV AQUATICS	72.90
10531207	112800	2/21/2019	BENSON SYSTEMS	208162	11/16/2018	NOV COMMUNITY CTR	72.90
10531207	112800	2/21/2019	BENSON SYSTEMS	208164	11/16/2018	NOV FITNESS CTR	49.95
10531207	112800	2/21/2019	BENSON SYSTEMS	208165	11/16/2018	NOV MCFARLAND PK	49.95
10531207	112800	2/21/2019	BENSON SYSTEMS	209594	12/17/2018	DEC PD EVIDENCE	24.95
10531207	112800	2/21/2019	BENSON SYSTEMS	209595	11/16/2018	DEC TOWN HALL	74.90
10531207	112800	2/21/2019	BENSON SYSTEMS	209596	12/17/2018	DEC COMMUNITY DEV	35.95
10531207	112800	2/21/2019	BENSON SYSTEMS	209597	12/17/2018	DEC IT BLDG	44.95
10531207	112800	2/21/2019	BENSON SYSTEMS	209598	12/17/2018	DEC ANTHEM FD 2	39.95
10531207	112800	2/21/2019	BENSON SYSTEMS	209599	12/17/2018	DEC SWWTP	32.95
10531207	112800	2/21/2019	BENSON SYSTEMS	209600	12/17/2018	DEC AQUATICS	72.90
10531207	112800	2/21/2019	BENSON SYSTEMS	209601	12/17/2018	DEC COMMUNITY CTR	72.90
10531207	112800	2/21/2019	BENSON SYSTEMS	209602	12/17/2018	DEC SILVER KING	65.90
10531207	112800	2/21/2019	BENSON SYSTEMS	209603	12/17/2018	DEC FITNESS CENTER	49.95
10531207	112800	2/21/2019	BENSON SYSTEMS	209604	12/17/2018	DEC MCFARLAND PK	49.95
10531207	112800	2/21/2019	BENSON SYSTEMS	211114	1/17/2019	JAN PD EVIDENCE	24.95
10531207	112800	2/21/2019	BENSON SYSTEMS	211115	1/17/2019	JAN TOWN HALL	74.90
10531207	112800	2/21/2019	BENSON SYSTEMS	211116	1/17/2019	JAN COMMUNITY DEV	35.95
10531207	112800	2/21/2019	BENSON SYSTEMS	211117	1/17/2019	JAN IT BLDG	44.95
10531207	112800	2/21/2019	BENSON SYSTEMS	211118	1/17/2019	JAN ANTHEM FD 2	39.95
10531207	112800	2/21/2019	BENSON SYSTEMS	211119	1/17/2019	JAN SWWTP	32.95
10531207	112800	2/21/2019	BENSON SYSTEMS	211120	1/17/2019	JAN AQUATICS	72.90
10531207	112800	2/21/2019	BENSON SYSTEMS	211121	1/17/2019	JAN COMMUNITY CTR	72.90
10531207	112800	2/21/2019	BENSON SYSTEMS	211122	1/17/2019	JAN SILVER KING	65.90
10531207	112800	2/21/2019	BENSON SYSTEMS	211123	1/17/2019	JAN FITNESS CTR	49.95
10531207	112800	2/21/2019	BENSON SYSTEMS	211124	1/17/2019	JAN MCFARLAND PK	49.95
10531207	112800	2/21/2019	BENSON SYSTEMS	508163	11/16/2018	NOV SILVER KING	65.90
10531207	112853	2/21/2019	UNITED EXTERMINATING	JAN19 654/655	2/1/2019	JANUARY 2019 - WWTPS	50.00
10531207	112853	2/21/2019	UNITED EXTERMINATING	JAN19 654/655	2/1/2019	JANUARY 2019-FIRE STATION 2	45.00
10531208	112874	2/28/2019	Day Auto Supply Inc	766264	2/13/2019	BATTERY FOR PD GENERATOR	186.15
10531302	119	2/15/2019	AMAZON.COM	013119 STMT	1/16/2019	Headline Signage for Facilities	39.01
10531302	112709	2/7/2019	FLORENCE TRUE VALUE HARDWARE	240146	1/4/2019	OPERATING SUPPLIES FOR FAC	4.02
10531302	112709	2/7/2019	FLORENCE TRUE VALUE HARDWARE	240364	1/17/2019	OPERATING SUPPLIES FOR FAC	6.77
10531302	112709	2/7/2019	FLORENCE TRUE VALUE HARDWARE	240448	1/23/2019	OPERATING SUPPLIES FOR FAC	4.22
10531302	112709	2/7/2019	FLORENCE TRUE VALUE HARDWARE	240474	1/25/2019	Blanket: Operating Supplies for	11.46
10531302	112709	2/7/2019	FLORENCE TRUE VALUE HARDWARE	240479	1/25/2019	OPERATING SUPPLIES FOR FAC	52.37
10531302	112750	2/14/2019	Central Arizona Supply Inc	1034221-00	12/31/2018	MARS 230V 3-SPD BLOWER MOTOR	104.62
10531302	112760	2/14/2019	FLORENCE TRUE VALUE HARDWARE	239304	11/8/2018	BPO FOR OPERATING SUPPLIES-FACILITIES	101.51
10531302	112760	2/14/2019	FLORENCE TRUE VALUE HARDWARE	239327	11/9/2018	OPERATING SUPPLIES-FACILITIES	10.46
10531302	112760	2/14/2019	FLORENCE TRUE VALUE HARDWARE	239376	11/13/2018	OPERATING SUPPLIES-FACILITIES	47.63
10531302	112760	2/14/2019	FLORENCE TRUE VALUE HARDWARE	239470	11/19/2018	OPERATING SUPPLIES-FACILITIES	2.45
10531302	112760	2/14/2019	FLORENCE TRUE VALUE HARDWARE	240014	12/21/2018	OPERATING SUPPLIES-FACILITIES	5.32
10531302	112760	2/14/2019	FLORENCE TRUE VALUE HARDWARE	240580	1/13/2019	OPERATING SUPPLIES-FACILITIES	42.33
10531302	112760	2/14/2019	FLORENCE TRUE VALUE HARDWARE	240597	2/1/2019	OPERATING SUPPLIES-FACILITIES	4.22
10531302	112760	2/14/2019	FLORENCE TRUE VALUE HARDWARE	240634	2/5/2019	OPERATING SUPPLIES-FACILITIES	14.80
10531302	112760	2/14/2019	FLORENCE TRUE VALUE HARDWARE	240656	2/6/2019	OPERATING SUPPLIES-FACILITIES	8.45
10531302	112760	2/14/2019	FLORENCE TRUE VALUE HARDWARE	240680	2/7/2019	OPERATING SUPPLIES-FACILITIES	10.91
10531302	112760	2/14/2019	FLORENCE TRUE VALUE HARDWARE	240715	2/8/2019	OPERATING SUPPLIES-FACILITIES	5.82
10531302	112880	2/28/2019	FLORENCE TRUE VALUE HARDWARE	239873	12/14/2018	BALL VALVE	11.46
10531302	112880	2/28/2019	FLORENCE TRUE VALUE HARDWARE	239919	12/18/2018	BATTRIES	31.76
10531302	112880	2/28/2019	FLORENCE TRUE VALUE HARDWARE	240746	2/11/2019	GLOVE, BLADE	54.35
10531302	112880	2/28/2019	FLORENCE TRUE VALUE HARDWARE	240769	2/12/2019	DOME COVER	29.06
10531302	112880	2/28/2019	FLORENCE TRUE VALUE HARDWARE	240813	2/14/2019	SNAP COVER	20.92
10531302	112880	2/28/2019	FLORENCE TRUE VALUE HARDWARE	240816	2/14/2019	GFI COVER	20.92
10531302	112880	2/28/2019	FLORENCE TRUE VALUE HARDWARE	240837	2/15/2019	COUPLING TUBE	39.26
10531302	112880	2/28/2019	FLORENCE TRUE VALUE HARDWARE	240839	2/15/2019	TAPE, MIRROR	13.61
10531302	112880	2/28/2019	FLORENCE TRUE VALUE HARDWARE	240918	2/21/2019	BIT	8.45
10531304	112890	2/28/2019	JENNIFER BAHME	JCP2626	2/1/2019	Uniform Allowance for boots/pants	302.47
10531306	112737	2/7/2019	WEX BANK	57654083	1/31/2019	JAN FUEL-FAC MAINT	157.65
10531311	112779	2/14/2019	WAXIE SANITARY SUPPLY	77916604	12/7/2018	CUSTODIAL NEEDS	581.14
10531311	112880	2/28/2019	FLORENCE TRUE VALUE HARDWARE	239292	11/8/2018	SCREW DRIVER BITS	26.46
10531311	112880	2/28/2019	FLORENCE TRUE VALUE HARDWARE	239491	11/20/2018	DRAIN OPENER	24.56
10531311	112880	2/28/2019	FLORENCE TRUE VALUE HARDWARE	240291	1/14/2019	CHALK, REEL, END	21.92
10531315	112779	2/14/2019	WAXIE SANITARY SUPPLY	778700530	12/7/2018	TRAFFIC MAT	1,089.36
10531315	112779	2/14/2019	WAXIE SANITARY SUPPLY	77986757	1/11/2019	DISPOSABLE MOPS	129.76
10531315	112915	2/28/2019	WAXIE SANITARY SUPPLY	77975823	1/8/2019	BPO FOR CUSTODIAL SUPPLIES-FACILITIES	2,145.73
10531316	112690	2/7/2019	ARIZONA CORRECTIONAL INDUSTRIES	453771	9/27/2018	BPO/DOOR REPAIRS SVS-POLICE EVIDENCE	162.90

10531316	112704	2/7/2019	E & JC Heating & Cooling LLC	10102	1/2/2019	INSTALL/FIX WIRES ON BLOWER MOTOR @ PW		85.00
10531316	112775	2/14/2019	Truly Painting & More LLC	2309	12/27/2018	Miscellaneous patch, repair & paint needs		565.00
10531316	112810	2/21/2019	DH Pace Company Inc.	SVC/66808	11/19/2018	OVERHEAD DOOR SERVICES FOR FD STA 1		1,729.17
10531316	112810	2/21/2019	DH Pace Company Inc.	SVC/67695	12/27/2018	OVERHEAD DOOR SERVICES FOR PW		2,908.51
10531316	112810	2/21/2019	DH Pace Company Inc.	SVC/68100	12/31/2018	OVERHEAD DOOR SVC FD STA 2		1,899.26
10531316	112847	2/21/2019	SUPERIOR ELECTRIC LLC	2056	1/14/2019	ELECTRICAL SVC FOR FS#1 HELICOPTER		100.00
10531316	112847	2/21/2019	SUPERIOR ELECTRIC LLC	2059	1/21/2019	FITNESS CENTER ELECTRIC PANEL		8,925.00
							$	24,235.42

General Government

10532201	112751	2/14/2019	CENTURYLINK	JAN19/0118 062M	2/1/2019	MAIN TRUNK LINE		527.66
10532201	112753	2/14/2019	COX BUSINESS	FEB19/VAR 8742601000	1/28/2019	LIBRARY		265.38
10532214	112693	2/7/2019	ARIZONA PUBLIC SERVICE	JAN19 8742601000	2/4/2019	440 N MAIN ST STE 101		178.79
10532214	112693	2/7/2019	ARIZONA PUBLIC SERVICE	JAN19 8742601000	2/4/2019	440 N MAIN ST STE 201		71.10
10532214	112693	2/7/2019	ARIZONA PUBLIC SERVICE	JAN19 8742601000	2/4/2019	440 N MAIN ST STE 202		84.79
10532214	112693	2/7/2019	ARIZONA PUBLIC SERVICE	JAN19 8742601000	2/4/2019	440 N MAIN STE 102		139.41
10532214	112693	2/7/2019	ARIZONA PUBLIC SERVICE	JAN19 8742601000	2/4/2019	440N MAIN ST SILVER KING		97.64
10532215	112693	2/7/2019	ARIZONA PUBLIC SERVICE	JAN19 8742601000	2/4/2019	24 W RUGGLES ST		594.73
10532215	112693	2/7/2019	ARIZONA PUBLIC SERVICE	JAN19 8742601000	2/4/2019	24 W RUGGLES ST-MCFARLAND		60.05
10532215	112693	2/7/2019	ARIZONA PUBLIC SERVICE	JAN19 8742601000	2/4/2019	291 N BAILEY ST		119.55
10532215	112693	2/7/2019	ARIZONA PUBLIC SERVICE	JAN19 8742601000	2/4/2019	600 N MAIN ST - IT		209.90
10532215	112693	2/7/2019	ARIZONA PUBLIC SERVICE	JAN19 8742601000	2/4/2019	775 N MAIN ST TOWN HALL		2,642.72
10532215	112693	2/7/2019	ARIZONA PUBLIC SERVICE	JAN19	2/4/2019	778 N MAIN ST		3,296.87
10532314	112914	2/28/2019	WATER SHED	15188	12/31/2018	BLANKET PO FOR TOWN HALL ICE/WATER		12.07
10532314	112914	2/28/2019	WATER SHED	15286	1/24/2019	BLANKET PO FOR TOWN HALL ICE/WATER		23.86
10532314	112914	2/28/2019	WATER SHED	15298	1/28/2019	BLANKET PO FOR TOWN HALL ICE/WATER		22.92
10532314	112914	2/28/2019	WATER SHED	300034	2/4/2019	BLANKET PO FOR TOWN HALL ICE/WATER		13.16
10532314	112914	2/28/2019	WATER SHED	400042	2/20/2019	BLANKET PO FOR TOWN HALL ICE/WATER		15.91
10532314	112914	2/28/2019	WATER SHED	40006	2/11/2019	BLANKET PO FOR TOWN HALL ICE/WATER		23.86
10532314	112914	2/28/2019	WATER SHED	400062	2/25/2019	BLANKET PO FOR TOWN HALL ICE/WATER		17.28
10532408	112868	2/28/2019	Caliente Casa del Sol	12165	10/1/2018	2016,2017,2018 Assessments on lots in Caliente owned by the Town		1,025.00
10532409			BRIGGS REALTY LLC	96315EW	1/28/2019	COMMISSION FOR 3818 N SOUTH DAKOTA AVE #563		
10532409	112625	Multiple	BRIGGS REALTY LLC	96315EW	1/28/2019	COMMISSION FOR 3818 N SOUTH DAKOTA AVE #563		-
10532409	112727	2/7/2019	SUBEX INC	40000339	1/31/2019	SUBEX CYBERSECURITY AGREEMENT		23,333.32
10532410	112748	2/14/2019	BRIGGS REALTY LLC	20047057 FEB19	2/1/2019	Parcel Serch/Consulting Fee for 200-47-058		100.00
10532410	112748	2/14/2019	BRIGGS REALTY LLC	20047057 FEB19	2/1/2019	Parcel Serch/Consutling Fee 200-47-057		100.00
							$	32,975.97

Fleet-General Government

10536207	112773	2/14/2019	T-MOBILE USA INC.	963909586	2/1/2019	Sync-up (GPS)		27.82
10536304	112886	2/28/2019	Industrial Safety Shoe Company	T200-0066079	2/4/2019	Uniform Boots - David Hills		82.25
10536306	112737	2/7/2019	WEX BANK	57654083	1/31/2019	JAN FUEL-FLEET		84.64
10536311	119	2/15/2019	AMAZON.COM	013119 STMT	1/8/2019	Amazon: Tools for Fleet (3 Socket Sets)		57.78
10536311	119	2/15/2019	AMAZON.COM	013119 STMT	1/8/2019	Amazon: Tools for Fleet staff (3-Ratcheting Wrench Sets)		219.24
10536311	119	2/15/2019	HOME DEPOT CREDIT SERVICES	013119 STMT	1/8/2019	Impact Wrench Kit		141.00
10536311	112755	2/14/2019	Day Auto Supply Inc	765632	2/6/2019	REPLACMENT CASTERS FOR SHOP		57.33
10536314	112702	2/7/2019	Day Auto Supply Inc	13019	1/30/2019	Blanket for Shop Tools		8.81
10536314	112743	2/14/2019	Arizona Brake & Clutch Supply	092-0024085	2/11/2019	Black nitro gloves for Shop		22.44
10536314	112809	2/21/2019	Day Auto Supply Inc	765735	2/7/2019	LUBRICANT SPRAY FOR SHOP		77.60
10536314	112809	2/21/2019	Day Auto Supply Inc	765862	2/8/2019	DIELECTRIC GREASE FOR SHOP		3.58
10536314	112809	2/21/2019	Day Auto Supply Inc	766110	1/12/2019	SHOP TOWELS		50.65
10536314	112874	2/28/2019	Day Auto Supply Inc	766708	2/19/2019	CABLE TIES FOR SHOP		6.46
10536314	112874	2/28/2019	Day Auto Supply Inc	766717	2/19/2019	ENGINE DEGREASER FOR SHOP		30.74
10536314	112874	2/28/2019	Day Auto Supply Inc	766942	2/21/2019	BRAKLEEN FOR SHOP		16.56
							$	886.90

Capital Improvement Projects-General

11515506	112694	2/7/2019	AUTO BOSS RV	101740	10/19/2018	Paint the Rehab Box Truck		4,450.05
11515506	112694	2/7/2019	AUTO BOSS RV	101771	1/21/2018	interior replacement on Rehab Van		1,738.01
11515506	112694	2/7/2019	AUTO BOSS RV	101777	1/3/2019	lighting work on rehab truck		792.58
11515506	112694	2/7/2019	AUTO BOSS RV	404770	12/11/2018	Reflective stripe on body of van to increase visability		717.53
11522217	112883	2/28/2019	GREENPLAY LLC	6335	2/10/2019	Parks and Recreation Comprehensive Plan		36,534.50
11522217	112887	2/28/2019	J2 Engineering And	11079	2/15/2019	Professional Services - Poston Butte Preserve Project - Approved by Council on 7/16/18		13,504.56
11531211	112775	2/14/2019	Truly Painting & More LLC	2308	12/27/2018	Sound board		1,875.60
11532408	112728	2/7/2019	TERRACON CONSULTANTS INC	TB58870	1/24/2019	ASBESTOS & LEAD TESTING-KOKOPELLI		3,850.00
							$	63,462.83

12518201	112912	2/28/2019	Verizon Wireless	9822710235	1/21/2019	PW / STREETS		571.08
12518205	112869	2/28/2019	Casa Grande Valley Newspaper Inc.	27527-3017	1/24/2019	Advertising Public Notices		67.32
12518207	112773	2/14/2019	T-MOBILE USA INC.	963909583	2/1/2019	OBD11 Extension cables for GPS		260.80
12518207	112773	2/14/2019	T-MOBILE USA INC.	963909586	2/1/2019	Sync-up (GPS)		306.02
12518208	112708	2/7/2019	FERRELLGAS	1104612582	1/15/2019	Propane for the PW yard		480.74
12518209	112702	2/7/2019	Day Auto Supply Inc	764367	1/23/2019	DOME LIGHT FOR ST-14		5.02
12518209	112702	2/7/2019	Day Auto Supply Inc	764392	1/23/2019	BATTERIES FOR ST-11		216.00
12518209	112702	2/7/2019	Day Auto Supply Inc	765032	1/30/2019	BATTERY FOR ST-15		26.64

12518209	112702	2/7/2019	Day Auto Supply Inc	765054	1/30/2019	CREDIT	(131.72)
12518209	112733	2/7/2019	Verizon Wireless	16387217	1/14/2019	NETWORK FLEET GPS FOR NOV 18	127.50
12518209	112747	2/14/2019	BERGKAMP INC.	36342	1/24/2019	Control box for ST-23	327.66
12518209	112755	2/14/2019	Day Auto Supply Inc	765519	2/5/2019	OIL & FILTERS FOR ST-79	32.31
12518209	112769	2/14/2019	SHAWS INTERIORS	3458	2/6/2019	REPAIR DRIVERS SEAT FOR ST-11	107.98
12518209	112874	2/28/2019	Day Auto Supply Inc	766001	2/11/2019	SEAT COVES FOR ST-13	38.21
12518209	112895	2/28/2019	Manatee Tire & Auto Inc. dba	186133	2/15/2019	4 TIRES FOR ST-27	541.28
12518209	112911	2/28/2019	UNITED ROTARY BRUSH CORPORATION	C1231051	2/12/2019	Rear broom for ST-26	409.77
12518209	112911	2/28/2019	UNITED ROTARY BRUSH CORPORATION	C1231051	2/12/2019	Sales tax for Inv# C1231051	37.70
12518211	112702	2/7/2019	Day Auto Supply Inc	764440	1/23/2019	OIL & FILTER FOR ST-18	97.60
12518211	112702	2/7/2019	Day Auto Supply Inc	765066	1/30/2019	SEAT BELT FOR ST-24	78.94
12518211	112718	2/7/2019	Manatee Tire & Auto Inc. dba	185774	2/4/2019	Blanket for Fleet tires & service	120.33
12518211	112730	2/7/2019	Titan Machinery Inc.	11957919 GP	1/24/2019	SERP BELT FOR ST-18 (LOADER)	66.09
12518211	112752	2/14/2019	COOLIDGE ACE HARDWARE	162954/2	2/6/2019	Braided tube for ST-58 (saw cut machine)	9.26
12518211	112764	2/14/2019	McClure Machine Shop LLC /	5042	2/11/2019	REPAIR LOADER BUCKET ON ST-18	614.10
12518211	112874	2/28/2019	Day Auto Supply Inc	466276	2/13/2019	HYD FLUID FOR ST-3	58.41
12518211	112874	2/28/2019	Day Auto Supply Inc	766234	2/13/2019	COOLANT FOR ST-30	85.11
12518211	112874	2/28/2019	Day Auto Supply Inc	766338	2/14/2019	HOSE CLAMP FOR ST-30	13.87
12518211	112874	2/28/2019	Day Auto Supply Inc	766686	2/19/2019	COUPLER FOR ST-30	5.26
12518211	112879	2/28/2019	EMPIRE SOUTHWEST	EMPS4577992	2/8/2019	VALVE & BRACKET FOR ST-30	174.49
12518211	112879	2/28/2019	EMPIRE SOUTHWEST	EMPS4582310	2/14/2019	TUBE & HOSE FOR ST-30	241.01
12518211	112879	2/28/2019	EMPIRE SOUTHWEST	EMPS458339	2/13/2019	PIPE, HOSES 7 VALVE FOR ST-30	69.34
12518214	112781	2/14/2019	ZUMAR IND.	4561	1/31/2019	STRET SIGNS & POSTS	230.74
12518214	112917	2/28/2019	ZUMAR IND.	4506	1/11/2019	Blanket: Streets Signs & Posts (various)	10,356.43
12518214	112917	2/28/2019	ZUMAR IND.	4506	1/11/2019	BPO FOR VARIOUS STREET SIGNS & POSTS	129.72
12518215	112693	2/7/2019	ARIZONA PUBLIC SERVICE	60000-JAN19	2/4/2019	1206 MAIN ST ST LIGHTS	2,936.26
12518215	112693	2/7/2019	ARIZONA PUBLIC SERVICE	8742601000 JAN19	2/4/2019	201 N GRANITE ST	40.12
12518215	112693	2/7/2019	ARIZONA PUBLIC SERVICE	8742601000 JAN19	2/4/2019	2028 N HUNT HWY FIRE ST 2 TRAF LT	108.95
12518215	112693	2/7/2019	ARIZONA PUBLIC SERVICE	8742601000 JAN19	2/4/2019	3180 N HUNT HWY	163.57
12518215	112693	2/7/2019	ARIZONA PUBLIC SERVICE	8742601000 JAN19	2/4/2019	444 N WARNER ST	575.64
12518215	112693	2/7/2019	ARIZONA PUBLIC SERVICE	8742601000 JAN19	2/4/2019	4552 N HUNT HWY	158.20
12518215	112693	2/7/2019	ARIZONA PUBLIC SERVICE	8742601000 JAN19	2/4/2019	460 N WARNER ST	12.61
12518215	112693	2/7/2019	ARIZONA PUBLIC SERVICE	8742601000 JAN19	2/4/2019	PINAL PKWY	98.56
12518215	112693	2/7/2019	ARIZONA PUBLIC SERVICE	8742601000 JAN19	2/4/2019	SW COR MAIN & BUTTE TRLG SIG	60.30
12518215	112757	2/14/2019	Electrical District No. 2	FEB19/66606	2/4/2019	DIVERSION DAM RD HWY 79/BOWLIN	267.63
12518215	112790	2/21/2019	APS	JAN19 AR0480006475	1/28/2019	O&M for streetlights Town - 370	924.20
12518215	112801	2/21/2019	BIA	JAN19/VAR	2/5/2019	17 DD LTS @ FLO N FLO	233.75
12518215	112801	2/21/2019	BIA	JAN19/VAR	2/5/2019	723 N PINAL PKWY TRAFFIC LIGHT	63.88
12518215	112801	2/21/2019	BIA	JAN19/VAR	2/5/2019	FLO GRDN 4DD LTS	61.60
12518215	112801	2/21/2019	BIA	JAN19/VAR	2/5/2019	HWY 79 FLORENCE GARDEN D-D LIGHTS (8)	110.00
12518215	112801	2/21/2019	BIA	JAN19/VAR	2/5/2019	HWY 87 & CAMPBELL	46.20
12518215	112878	2/28/2019	Electrical District No. 2	JAN/19 66289	2/11/2019	7158 W HUNT HWY SIGNAL LIGHT	45.33
12518217	112723	2/7/2019	Regional Pavement Maintenance of Az Inc	P614-1	11/16/2018	CHANGE ORDER 11.16.18	2,362.83
12518231	112827	2/21/2019	KS STATEBANK	CONTR 12.05.18	2/5/2019	CONTRACT PAYMENT FOR NEW COPIERS	209.75
12518302	112709	2/7/2019	FLORENCE TRUE VALUE HARDWARE	238793	10/10/2018	OPERATING SUPPLIES FOR PW	29.60
12518302	112709	2/7/2019	FLORENCE TRUE VALUE HARDWARE	240437	1/23/2019	OPERATING SUPPLIES FOR PW	21.27
12518302	112778	2/14/2019	WATER SHED	15231	1/10/2019	Ice/WATER PW	60.38
12518302	112844	2/21/2019	Staples Business Advantage	7212088383-0-1	1/25/2019	brEAKROOM SUPPLIES	87.27
12518304	119	2/15/2019	Newegg Business Inc.	013119 STMT	1/30/2019	Scanner purchase	435.00
12518304	112867	2/28/2019	C-A-L STORES COMPANIES INC.	2301/22	8/21/2018	Uniform Allowance - Valenzuela	218.39
12518304	112867	2/28/2019	C-A-L STORES COMPANIES INC.	B41017-B42394	11/13/2018	CREDIT FOR OVERPAYMENT	(550.00)
12518304	112867	2/28/2019	C-A-L STORES COMPANIES INC.	E06295	12/21/2018	CREDIT FOR OVERPAYMENT	(82.49)
12518304	112867	2/28/2019	C-A-L STORES COMPANIES INC.	E06295	12/21/2018	Uniform Allowance - B. HONEA	328.00
12518304	112867	2/28/2019	C-A-L STORES COMPANIES INC.	E42285	12/14/2018	Uniform Allowance - G. GARCIA	550.00
12518306	112737	2/7/2019	WEX BANK	57654083	1/31/2019	JAN FUEL-HURF	3,210.99
12518312	119	2/15/2019	Xpressmyself.com LLC	013119 STMT	1/15/2019	Safety signs per insurance inspection	35.60
12518312	112859	2/28/2019	AGS	7466234	8/17/2018	BPO FOR 1ST AID SUPPLIES	30.73
12518312	112859	2/28/2019	AGS	7477675	1/15/2019	BPO FOR 1ST AID SUPPLIES	77.74
12518312	112859	2/28/2019	AGS	7478078	1/18/2019	BPO FOR 1ST AID SUPPLIES	117.50
12518314	112743	2/14/2019	Arizona Brake & Clutch Supply	092-0024085	2/11/2019	Black nitro gloves for Shop	17.19
12518317	112691	2/7/2019	ARIZONA DEPARTMENT OF CORRECTIONS-ITA	A04116A-20190103	1/11/2019	BPO-INMATE LABOR/WORK PROGRAM	8.00
12518317	112691	2/7/2019	ARIZONA DEPARTMENT OF CORRECTIONS-ITA	A04117A-20180913	9/24/2018	BPO-INMATE LABOR/WORK PROGRAM	60.00
12518323	112877	2/28/2019	DOSSIER SYSTEMS	1904-34	2/13/2019	Renewal of Dossier Fleet Maintenance	1,644.20
12518403	119	2/15/2019	FRED PRYOR SEMINARS	013119 STMT	1/10/2019	Fred Pryor Training: PW employees C. Williams / J. Pitts Supervising Negative Behaviors	148.50
12536304	112886	2/28/2019	Industrial Safety Shoe Company	T200-0066079	2/4/2019		63.00
12536306	112737	2/7/2019	WEX BANK	57654083	1/31/2019	JAN FUEL-FLEET	64.83
12536311	119	2/15/2019	AMAZON.COM	013119 STMT	1/8/2019	Amazon: Tools for Fleet (3 Socket Sets)	44.26
12536311	119	2/15/2019	AMAZON.COM	013119 STMT	1/8/2019	Amazon: Tools for Fleet staff (3-Ratcheting Wrench Sets)	167.93
12536311	119	2/15/2019	HOME DEPOT CREDIT SERVICES	013119 STMT	1/8/2019	Impact Wrench Kit	102.82
12536311	112755	2/14/2019	Day Auto Supply Inc	765632	2/6/2019	REPLACEMENT CASTERS FOR SHOP	43.92
12536312	119	2/15/2019	Xpressmyself.com LLC	013119 STMT	1/15/2019	Safety signs per insurance inspection	27.26
12536314	112702	2/7/2019	Day Auto Supply Inc	13019	1/30/2019	Blanket for Shop Tools	6.75
12536314	112809	2/21/2019	Day Auto Supply Inc	765735	2/7/2019	LUBRICANT SPRAY FOR SHOP	59.44
12536314	112809	2/21/2019	Day Auto Supply Inc	765862	2/8/2019	DIELECTRIC GREASE FOR SHOP	2.75
12536314	112809	2/21/2019	Day Auto Supply Inc	766110	1/12/2019	SHOP TOWELS	38.80
12536314	112874	2/28/2019	Day Auto Supply Inc	766708	2/19/2019	CABLE TIES FOR SHOP	4.95
12536314	112874	2/28/2019	Day Auto Supply Inc	766717	2/19/2019	ENGINE DEGREASER FOR SHOP	23.54
12536314	112874	2/28/2019	Day Auto Supply Inc	766942	2/21/2019	BRAKLEEN FOR SHOP	12.69
12581507	112846	2/21/2019	Structural Grace Inc.	4807	2/7/2019	cip t-12 butte ave bridge	880.53

								$ 32,245.73
51219000	112229	12/13/2018	2nd Temp	10802802	12/6/2018	Water Deposit Refund	85.27
51219000	112699	2/7/2019	2nd Temp	10700810	2/4/2019	WATER DEPOSIT REFUND	86.60
51219000	112700	2/7/2019	2nd Temp	10116013	2/4/2019	Water Deposit Refund	88.18
51219000	112715	2/7/2019	2nd Temp	430712	2/4/2019	Water Deposit Refund	78.28
51219000	112770	2/14/2019	2nd Temp	308573	2/1/2019	Water Deposit Refund	225.00
51219000	112797	2/21/2019	2nd Temp	510105	2/15/2019	Water Deposit Refund	81.29
51219000	112812	2/21/2019	2nd Temp	10600543	2/13/2019	Water Deposit Refund	35.75
51219000	112842	2/21/2019	2nd Temp	10119003	2/13/2019	Water Deposit Refund	65.75
51219000	112870	2/28/2019	2nd Temp	109009	2/27/2019	Water Deposit Refund	52.21
51219000	112888	2/28/2019	2nd Temp	10107517	2/27/2019	Water Deposit Refund	106.96
51219000	112897	2/28/2019	2nd Temp	510404	2/22/2019	Water Deposit Refund	109.54
51219000	112901	2/28/2019	2nd Temp	306552	2/25/2019	Water Deposit Refund	85.32
51219000	112907	2/28/2019	2nd Temp	10316308	2/28/2019	Water Deposit Refund	100.62
51219000	112909	2/28/2019	2nd Temp	404005	2/22/2019	Water Deposit Refund	5.88
51219000	112916	2/28/2019	2nd Temp	10112204	2/22/2019	Water Deposit Refund	150.00
51371445	112770	2/14/2019	2nd Temp	308573	2/1/2019	ESTABLISHMENT FEE	20.00
51574201	112912	2/28/2019	Verizon Wireless	9822710235	1/21/2019	WW - 50% SPLIT	448.74
51574207	119	2/15/2019	ADOBE SYSTEMS INCORPORATED	013119 STMT	1/23/2019	Photo license	32.75
51574207	112773	2/14/2019	T-MOBILE USA INC.	963909586	2/1/2019	Sync-up (GPS)	111.28
51574207	112803	2/21/2019	CASA GRANDE COURIER INC.	1422	2/10/2019	WATER COURIER CONTRACT SERVICES	320.00
51574207	112829	2/21/2019	Legend Technical Svcs Inc.	1901741	1/31/2019	DRINKING WATER TESTING - JAN/19	426.00
51574209	112702	2/7/2019	Day Auto Supply Inc	764828	1/28/2019	IDLER PULLY FOR W-1	19.90
51574209	112716	2/7/2019	JONES AUTO CENTER	175659	1/31/2019	DOOR HANDLE FOR W-1	29.41
51574209	112733	2/7/2019	Verizon Wireless	16387217	1/14/2019	NETWORK FLEET GPS FOR NOV 18	63.75
51574209	112755	2/14/2019	Day Auto Supply Inc	765550	2/5/2019	Blanket for Fleet Parts	3.25
51574209	112755	2/14/2019	Day Auto Supply Inc	765552	2/5/2019	THREAD LOCK FOR W-1	7.96
51574209	112755	2/14/2019	Day Auto Supply Inc	765569	2/5/2019	SERP BELT & TENSIONER FOR W-1	47.15
51574209	112894	2/28/2019	JONES AUTO CENTER	175912	2/14/2019	Fuel PUMP FOR W-1	280.02
51574215	112693	2/7/2019	ARIZONA PUBLIC SERVICE	8742601000 JAN19	2/4/2019	425 E RUGGLES	775.97
51574215	112693	2/7/2019	ARIZONA PUBLIC SERVICE	8742601000 JAN19	2/4/2019	425 E RUGGLES ST 50%	2,096.16
51574215	112693	2/7/2019	ARIZONA PUBLIC SERVICE	8742601000 JAN19	2/4/2019	425 E RUGGLES ST REAR	71.84
51574215	112693	2/7/2019	ARIZONA PUBLIC SERVICE	8742601000 JAN19	2/4/2019	425 E RUGGLES ST REAR	321.19
51574215	112693	2/7/2019	ARIZONA PUBLIC SERVICE	8742601000 JAN19	2/4/2019	565 S QUARTZ ST WELL 5	5,632.96
51574215	112801	2/21/2019	BIA	JAN19/VAR	2/5/2019	455 HWY 79 WELL 1 W/O RVBTTM	2,175.32
51574215	112801	2/21/2019	BIA	JAN19/VAR	2/5/2019	IOWA MTR @ WTR TANK ON HILL	1,622.78
51574217			Arizona Department of	DEC18/7998S	1/1/2019	DEC 1 -DEC 31, 2018	
51574217	112629	Multiple	Arizona Department of	DEC18/7998S	1/1/2019	DEC 1 -DEC 31, 2018	
51574217	112710	2/7/2019	Hansen Engineering & Surveying, Inc.	6594 T&M	1/24/2019	WATER ENGINEERING SERVICES	1,035.00
51574217	112791	2/21/2019	Arizona Department of	0000287969X	2/1/2019	MAP Monitoring JAN 1-JAN 31, 2019	40.54
51574217	112857	2/21/2019	WESTLAND RESOURCES INC	48611003	2/8/2019	Water System Design - Phase 1	718.75
51574304	112696	2/7/2019	BC GRAPHICS	12619-1	1/23/2019	Holden Kent - Uniform Shirt Allowance	224.04
51574304	112696	2/7/2019	BC GRAPHICS	12619-1	1/23/2019	Nick Zapata - Uniform Shirt Allowance	112.02
51574304	112789	2/21/2019	ANTHONY CORDOVA	285416	2/2/2019	UNIFORM BOOT 1 - CORDOVA A	157.50
51574304	112826	2/21/2019	HOLDEN KENT	2853852	2/12/2019	Uniform Allowance Pants KH	252.24
51574304	112886	2/28/2019	Industrial Safety Shoe Company	T200-0066079	2/4/2019		10.50
51574306	112737	2/7/2019	WEX BANK	57654083	1/31/2019	JAN FUEL-WATER	1,067.72
51574310	112703	2/7/2019	DPC ENTERPRISES L.P.	272000027-19	1/10/2019	ChEMICALS	851.08
51574310	112711	2/7/2019	HILL BROTHERS CHEMICAL CO.	5091464	12/21/2018	Chemicals	628.29
51574311	119	2/15/2019	AMAZON.COM	013119 STMT	1/8/2019	Amazon: Tools for Fleet (3 Socket Sets)	7.38
51574311	119	2/15/2019	AMAZON.COM	013119 STMT	1/8/2019	Amazon: Tools for Fleet staff (3-Ratcheting Wrench Sets)	27.99
51574311	119	2/15/2019	HOME DEPOT CREDIT SERVICES	013119 STMT	1/8/2019	Impact Wrench Kit	17.63
51574311	112702	2/7/2019	Day Auto Supply Inc	764792	1/28/2019	BEARINGS	102.39
51574311	112709	2/7/2019	FLORENCE TRUE VALUE HARDWARE	240317	1/15/2019	BLANKET: WATER SMALL TOOLS	116.11
51574311	112709	2/7/2019	FLORENCE TRUE VALUE HARDWARE	240465	1/24/2019	BLANKET: WATER SMALL TOOLS	50.34
51574311	112709	2/7/2019	FLORENCE TRUE VALUE HARDWARE	240476	1/25/2019	BLANKET: WATER SMALL TOOLS	80.79
51574311	112732	2/7/2019	USABlueBook - ACCT 703717	775958	1/4/2019	SMALL TOOLS	1,464.40
51574311	112755	2/14/2019	Day Auto Supply Inc	765632	2/6/2019	REPLACEMENT CASTERS FOR SHOP	7.32
51574312	119	2/15/2019	Xpressmyself.com LLC	013119 STMT	1/15/2019	Safety signs per insurance inspection	4.55
51574312	112793	2/21/2019	AGS	7480171	1/12/2019	SAFETY & FIRST AID - FACILITIES	114.85
51574314	112702	2/7/2019	Day Auto Supply Inc	13019	1/30/2019	Blanket for Shop Tools	1.12
51574314	112743	2/14/2019	Arizona Brake & Clutch Supply	092-0024085	2/11/2019	Black nitro gloves for Shop	2.86
51574314	112809	2/21/2019	Day Auto Supply Inc	765735	2/7/2019	LUBRICANT SPRAY FOR SHOP	9.91
51574314	112809	2/21/2019	Day Auto Supply Inc	765862	2/8/2019	DIELECTRIC GREASE FOR SHOP	0.46
51574314	112809	2/21/2019	Day Auto Supply Inc	766110	1/12/2019	SHOP TOWELS	6.47
51574314	112874	2/28/2019	Day Auto Supply Inc	766708	2/19/2019	CABLE TIES FOR SHOP	0.82
51574314	112874	2/28/2019	Day Auto Supply Inc	766717	2/19/2019	ENGINE DEGREASER FOR SHOP	3.92
51574314	112874	2/28/2019	Day Auto Supply Inc	766942	2/21/2019	BRAKLEEN FOR SHOP	2.12
51574320	112707	2/7/2019	Ferguson Waterworks	350282	1/23/2019	Utility Line REPAIR & MAINTENANCE	322.44
51574320	112709	2/7/2019	FLORENCE TRUE VALUE HARDWARE	240329	1/16/2019	MAINTEANCE & REPAIR	26.03
51574320	112709	2/7/2019	FLORENCE TRUE VALUE HARDWARE	240350	1/16/2019	MAINTEANCE & REPAIR	61.97
51574320	112709	2/7/2019	FLORENCE TRUE VALUE HARDWARE	240532	1/29/2019	MAINTNANCE & REPAIR	23.90
51574320	112814	2/21/2019	Ferguson Waterworks	351201	2/5/2019	LF 3/4 CTS LW BALL CURB ST	1,603.05
51574320	112833	2/21/2019	National Meter & Automation-AZ	$1110272.001	1/29/2019	3/4 BRONZE METER BODY	1,070.12
51574406	112749	2/14/2019	CENTRAL ARIZONA PROJECT	72331	1/20/2019	Water service charge prepayment for March 2019	35,953.78
51574406	112871	2/28/2019	CENTRAL ARIZONA PROJECT	72114	2/20/2019	M&I Subcontract	35,953.78
51574507	112742	2/14/2019	Apache Underground & Excavating	1381	1/23/2019	PHASE 2A-CDBG PORTION	169,700.00
51574507	112742	2/14/2019	Apache Underground & Excavating	1381	1/23/2019	PHASE 2B	219,496.00
51574507	112782	2/14/2019	Arizona Department of	CIP WU38	2/7/2019	CIP WU-38 WATERLINE REPLACEMENT PERMIT	900.00
51574507	Multiple	2/14/2019	Arizona Department of	CIP WU38	2/7/2019	CIPWU-38 WATERLINE REPLACEMENT PERMIT	900.00
51574507	Multiple	2/14/2019	Arizona Department of	CIP WU83 EXT	2/7/2019	CIP WU-83 12 DOWNTOWN LOOP EXT PERMIT"	900.00
51574507	112783	2/14/2019	Arizona Department of	CIP WU83 EXT	2/7/2019	CIP WU-83 12 DOWNTOWN LOOP EXT PERMIT"	900.00
51574507	112783	2/14/2019	Arizona Department of	CIP WU83 EXT	2/7/2019	CIP WU-I3 12 DOWNTOWN LOOP EXT PERMIT"	900.00
51574507	112783	2/14/2019	Arizona Department of	CIP WU83-EXT	2/7/2019	CIP WU-83 12 DOWNTOWN LOOP EXT PERMIT"	900.00

51574507	112857	2/21/2019	WESTLAND RESOURCES INC	48612004	2/8/2019	8 FF PIPELINE DESIGN*	5,083.48
							$ 497,676.74
52575201	112751	2/14/2019	CENTURYLINK	JAN19/8356 200B	1/28/2019	WATER WORKS ALARM LINES	108.86
52575201	112912	2/28/2019	Verizon Wireless	9822710235	1/21/2019	WW - 50% SPLIT	448.73
52575207	112803	2/21/2019	CASA GRANDE COURIER INC.	1422	2/10/2019	SWWTP COURIER CONTRACT SERVICES	1,276.20
52575207	112829	2/21/2019	Legend Technical Svcs Inc.	1901744	1/31/2019	REGULATORY TESTING - SOUTH WWTP JAN/19	4,426.00
52575208	112808	2/21/2019	COOLIDGE ENGINE & PUMP L.L.C.	8018	9/20/2018	GALVANIZED BASKET TRAINERS	1,510.16
52575209	112733	2/7/2019	Verizon Wireless	16387217	1/14/2019	NETWORK FLEET GPS FOR NOV 18	63.75
52575209	112874	2/28/2019	Day Auto Supply Inc	766926	2/21/2019	OIL & FILTRS FOR WW-26	41.87
52575209	112895	2/28/2019	Manatee Tire & Auto Inc. dba	186266	2/21/2019	4 TIRES FOR WW-26	564.86
52575215	112693	2/7/2019	ARIZONA PUBLIC SERVICE	8742601000 JAN19	2/4/2019	100 S PLANT RO	15,137.66
52575215	112693	2/7/2019	ARIZONA PUBLIC SERVICE	8742601000 JAN19	2/4/2019	425 E RUGGLES 50%	2,096.15
52575217	112722	2/7/2019	Pro-Tec Environmental Inc	19012401	1/25/2019	CIP SU-94 ANNUAL CLEANING OF WW LINES	3,701.25
52575302	112697	2/7/2019	BEARING-BELT & CHAIN INC.	1518687	1/28/2019	Blanket PO: Misc. Operating Supplies	38.31
52575302	112732	2/7/2019	USABlueBook - ACCT 703717	785623	1/15/2019	Blanket: Operating Supplies for WWTP's	246.05
52575302	112778	2/14/2019	WATER SHED	15214	1/8/2019	Ice/WATER PW	31.28
52575302	112806	2/21/2019	CHEMICAL FEEDING TECHNOLOGIES	34893	1/31/2019	MINIBUMP INSTRUMENT - SWWTP	405.00
52575304	112696	2/7/2019	BC GRAPHICS	12619-1	1/23/2019	Nick Zapata - Uniform Shirt Allowance	112.02
52575304	112789	2/21/2019	ANTHONY CORDOVA	285416	2/2/2019	UNIFORM BOOT 1 - CORDOVA A	17.50
52575304	112825	2/21/2019	JOY JONAS	3061954-083846	2/4/2019	Uniform BOOT #1 JJ	161.00
52575304	112826	2/21/2019	HOLDEN KENT	2853852	2/12/2019	Uniform Allowance Pants KH	28.03
52575304	112886	2/28/2019	Industrial Safety Shoe Company	T200-0066079	2/4/2019		17.50
52575306	112737	2/7/2019	WEX BANK	57654083	1/31/2019	JAN FUEL-S SEWER	156.70
52575310	112711	2/7/2019	HILL BROTHERS CHEMICAL CO.	50914063	12/21/2018	Chemicals	739.16
52575310	112822	2/21/2019	HILL BROTHERS CHEMICAL CO.	50914350	1/31/2019	SODIUM BISULFITE 40%	619.59
52575310	112822	2/21/2019	HILL BROTHERS CHEMICAL CO.	50914468	1/31/2019	12.5% LIQUID BLEACH SSWTP	1,458.13
52575310	112822	2/21/2019	HILL BROTHERS CHEMICAL CO.	50914468	1/31/2019	SODIUM BISULFITE 40% SWWTP	644.13
52575311	119	2/15/2019	AMAZON.COM	013119 STMT	1/8/2019	Amazon: Tools for Fleet (3 Socket Sets)	12.29
52575311	119	2/15/2019	AMAZON.COM	013119 STMT	1/8/2019	Amazon: Tools for Fleet staff (3-Ratcheting Wrench Sets)	46.65
52575311	119	2/15/2019	HOME DEPOT CREDIT SERVICES	013119 STMT	1/8/2019	Impact Wrench Kit	29.38
52575311	112755	2/14/2019	Day Auto Supply Inc	765632	2/6/2019	REPLACEMENT CASTERS FOR SHOP	12.20
52575312	119	2/15/2019	Xpressmyself.com LLC	013119 STMT	1/15/2019	Safety signs per insurance inspection	7.58
52575312	112793	2/21/2019	AGS	7580170	2/12/2019	SAFETY & FIRST AID-WWSP	9.98
52575314	112702	2/7/2019	Day Auto Supply Inc	13019	1/30/2019	Blanket for Shop Tools	1.87
52575314	112743	2/14/2019	Arizona Brake & Clutch Supply	092-0024085	2/11/2019	Black nitro gloves for Shop	4.77
52575314	112809	2/21/2019	Day Auto Supply Inc	765735	2/7/2019	LUBRICANT SPRAY FOR SHOP	16.51
52575314	112809	2/21/2019	Day Auto Supply Inc	765862	2/8/2019	DIELECTRIC GREASE FOR SHOP	0.76
52575314	112809	2/21/2019	Day Auto Supply Inc	766110	1/12/2019	SHOP TOWELS	10.78
52575314	112874	2/28/2019	Day Auto Supply Inc	766708	2/19/2019	CABLE TIES FOR SHOP	1.37
52575314	112874	2/28/2019	Day Auto Supply Inc	766717	2/19/2019	ENGINE DEGREASER FOR SHOP	6.54
52575314	112874	2/28/2019	Day Auto Supply Inc	766942	2/21/2019	BRAKLEEN FOR SHOP	3.53
52575320	112709	2/7/2019	FLORENCE TRUE VALUE HARDWARE	240327	1/16/2019	REPAIR & MAINTENANCE	58.21
52575320	112709	2/7/2019	FLORENCE TRUE VALUE HARDWARE	240383	1/19/2019	REPAIR & MAINTENANCE	61.33
52575320	112740	2/14/2019	A.C. Sanitation Service LLC	9995-106	1/8/2019	BIO-SOLID HAULING DECEMBER 2018	4,888.98
52575507	112706	2/7/2019	FAIRFIELD SERVICE OMPANY OF IN, LLC	80-40297-B	1/16/2019	CIP SU-90 SWWTP IMPROVEMENT MODIFICATIONS	9,043.35
52576207	112773	2/14/2019	T-MOBILE USA INC.	963909586	2/1/2019	Sync-up (GPS)	69.55
52576207	112803	2/21/2019	CASA GRANDE COURIER INC.	1422	2/10/2019	NWWTP COURIER CONTRACT SERVICES	141.80
52576207	112829	2/21/2019	Legend Technical Svcs Inc.	1901743	1/31/2019	REGULATORY TESTING - NORTH WWTP JAN/19	1,503.00
52576211	112808	2/21/2019	COOLIDGE ENGINE & PUMP L.L.C.	8107	1/29/2019	256TPA Frame Motor & Wiring	3,125.81
52576215	112801	2/21/2019	BIA	JAN19/VAR	2/5/2019	HWY 79 WASTE WATER PLANT W/SD OF INS	3,478.38
52576217	112791	2/21/2019	Arizona Department of	00029S433X	2/1/2019	NWWTP WATER QUALITY	500.00
52576302	112806	2/21/2019	CHEMICAL FEEDING TECHNOLOGIES	34893	1/31/2019	MINIBUMP INSTRUMENT NWWTP	405.00
52576304	112825	2/21/2019	JOY JONAS	3041953-652080	2/4/2019	Uniform PantS - JJ	65.26
52576306	112737	2/7/2019	WEX BANK	57654083	1/31/2019	JAN FUEL-N SEWER	500.31
52576310	112703	2/7/2019	DPC ENTERPRISES L.P.	272000024-19	1/9/2019	CHEMICALS	482.53
52576310	112711	2/7/2019	HILL BROTHERS CHEMICAL CO.	50914063	12/21/2018	Chemicals	1,728.33
52576312	112793	2/21/2019	AGS	7481072	2/12/2019	SAFETY & FIRST AID-WWNP	118.81
52581507	112840	2/21/2019	SCHOLZ CONTRACTING LLC	1	1/31/2019	CIP SU-20 RECHARGE FACILITY	32,640.30
52581507	112858	2/25/2019	JAYCO CONTRACTING LLC.	1204-381	2/11/2019	CIP SU-20 RECHARGE EARTHWORK	219,750.00
							$ 312,775.05
53219000	112873	2/28/2019	2nd Temp	714351	2/26/2019	ReFUND SANITATION DEPOSIT	16.34
53571201	112912	2/28/2019	Verizon Wireless	9822710235	1/21/2019	SANITATION	46.94
53571207	112773	2/14/2019	T-MOBILE USA INC.	963909586	2/1/2019	Sync-up (GPS)	13.91
53571217	112725	2/7/2019	RIGHT AWAY DISPOSAL LLC	2396762	2/1/2019	CREDIT FOR RESIDENTIAL BILLING JAN 2019	(442.34)
53571217	112725	2/7/2019	RIGHT AWAY DISPOSAL LLC	2396762	2/1/2019	RESIDENTIAL BILLING FOR FEBRUARY 2019	60,492.81
53571230	112735	2/7/2019	WASTE MANAGEMENT OF ARIZONA	0006978-0563-8	1/2/2019	CREDIT FOR OVERPAYMENT FOR DEC LANDFILL CHG	(4,149.20)
53571230	112735	2/7/2019	WASTE MANAGEMENT OF ARIZONA	0006978-0563-8	1/2/2019	Landfill fees - DEC 18	4,224.00
53571230	112838	2/21/2019	RIGHT AWAY DISPOSAL LLC	2404842	2/1/2019	instituional billing for february	8,044.05
53571304	112886	2/28/2019	Industrial Safety Shoe Company	T200-0066079	2/4/2019		1.75
53571306	112737	2/7/2019	WEX BANK	57654083	1/31/2019	JAN FUEL-SANITATION	134.09
53571311	119	2/15/2019	AMAZON.COM	013119 STMT	1/8/2019	Amazon: Tools for Fleet (3 Socket Sets)	1.23
53571311	119	2/15/2019	AMAZON.COM	013119 STMT	1/8/2019	Amazon: Tools for Fleet staff (3-Ratcheting Wrench Sets)	4.66
53571311	119	2/15/2019	HOME DEPOT CREDIT SERVICES	013119 STMT	1/8/2019	Impact Wrench Kit	2.92
53571311	112755	2/14/2019	Day Auto Supply Inc	765632	2/6/2019	REPLACEMENT CASTERS FOR SHOP	1.22
53571312	119	2/15/2019	Xpressmyself.com LLC	013119 STMT	1/15/2019	Safety signs per insurance inspection	0.76
53571314	112702	2/7/2019	Day Auto Supply Inc	13019	1/30/2019	Blanket for Shop Tools	0.19
53571314	112743	2/14/2019	Arizona Brake & Clutch Supply	092-0024085	2/11/2019	Black nitro gloves for Shop	0.48
53571314	112809	2/21/2019	Day Auto Supply Inc	765735	2/7/2019	LUBRICANT SPRAY FOR SHOP	1.65
53571314	112809	2/21/2019	Day Auto Supply Inc	765862	2/8/2019	DIELECTRIC GREASE FOR SHOP	0.08

53571314	112809	2/21/2019	Day Auto Supply Inc	766110	1/12/2019	SHOP TOWELS		1.08	
53571314	112874	2/28/2019	Day Auto Supply Inc	766708	2/19/2019	CABLE TIES FOR SHOP		0.14	
53571314	112874	2/28/2019	Day Auto Supply Inc	766717	2/19/2019	ENGINE DEGREASER FOR SHOP		0.65	
53571314	112874	2/28/2019	Day Auto Supply Inc	766942	2/21/2019	BRAKLEEN FOR SHOP		0.35	
						Fred Pryor Training: PW employees C. Williams / J. Pitts			
53571403	119	2/15/2019	FRED PRYOR SEMINARS	013119 STMT	1/10/2019	Supervising Negative Behaviors		24.75	
							$	*68,422.51*	
SLID #1									
301	112693	2/7/2019	ARIZONA PUBLIC SERVICE	FEB19 SLIDS	2/4/2019	SLID #1		2,848.21	
301	112790	2/21/2019	APS	JAN19 AR0480006475	1/28/2019	O&M for streetlights SLID 1-321		809.05	
							$	*3,657.26*	
SLID #2									
302	112693	2/7/2019	ARIZONA PUBLIC SERVICE	8742601000 JAN/19	1/23/2019	LATE FEE-SLID #1		1.90	
302	112693	2/7/2019	ARIZONA PUBLIC SERVICE	8742601000 JAN/19	1/23/2019	PAYMENT SHORT- SLID #2 CK#112515		98.34	
302	112693	2/7/2019	ARIZONA PUBLIC SERVICE	FEB19 SLIDS	2/4/2019	SLID #2		2,512.14	
302	112790	2/21/2019	APS	JAN19 AR0480006475	1/28/2019	O&M for streetlights SLID 2 0 326		820.80	
							$	*10,747.70*	
SLID #3									
303	112693	2/7/2019	ARIZONA PUBLIC SERVICE	8742601000 JAN/19	1/23/2019	LATE FEE-SLID #2		1.89	
303	112693	2/7/2019	ARIZONA PUBLIC SERVICE	8742601000 JAN/19	1/23/2019	PAYMENT SHORT-SLID #3 CK#112515		136.05	
303	112693	2/7/2019	ARIZONA PUBLIC SERVICE	FEB19 SLIDS	2/4/2019	SLID #3		2,280.76	
303	112790	2/21/2019	APS	JAN19 AR0480006475	1/28/2019	O&M for streetlights SLID 3 - 280		712.72	
							$	*3,131.42*	
Grant	112862	2/28/2019	AZ LAW ENFORCEMENT RADAR TECHNOLOGY	19-1044	2/19/2019	Radar PART AND ACCESS, INCLUDES LABOR		1,112.21	
							$	*1,112.21*	
CFD #1-Debt Service									
911	112738	2/7/2019	2nd Temp	10.1401023	2/4/2019	ASSESSMENT PD OFF 4/9/18		134.94	
911	112767	2/14/2019	2nd Temp	10.1301056	2/12/2019	OVER PMT ON ASSESSMENT PAYOFF		67.47	
911	112738	2/7/2019	2nd Temp	10.1401023	2/4/2019	ASSESSMENT PD OFF - 4/9/18		123.92	
911	112738	2/7/2019	2nd Temp	10.1401023	2/4/2019	ASSESSMENT PD OFF 4/9/18		34.00	
							$	*360.33*	
CFD #1 Administrative									
957	112758	2/14/2019	FESTER & CHAPMAN PLLC	85801	1/31/2019	Community Facility District Audit		2,250.00	
957	112780	2/14/2019	WILLDAN FINANCIAL SERVICES	010-40430	2/1/2019	17-18 CONTINUING DISCLOSURE SVC		700.00	
957	112843	2/21/2019	SIMS MURRAY LTD	23931	2/11/2019	2003 DEVELOPMENT AGREEMENT		213.75	
							$	*3,163.75*	
CFD #2 Administrative									
958	112758	2/14/2019	FESTER & CHAPMAN PLLC	85801	1/31/2019	Community Facility District Audit		2,250.00	
958	112780	2/14/2019	WILLDAN FINANCIAL SERVICES	010-40430	2/1/2019	17-18 CONTINUING DISCLOSURE SERCICE		1,100.00	
958	112843	2/21/2019	SIMS MURRAY LTD	23931	2/11/2019	2003 DEVELOPMENT AGREEMENT		213.75	
							$	*3,563.75*	
						Total Warrant Register		1,232,600.97	$ (0.00)

	TOWN OF FLORENCE COUNCIL ACTION FORM	**AGENDA ITEM 8a.**
MEETING DATE: April 1, 2019 **DEPARTMENT**: Finance **STAFF PRESENTER:** Lisa Garcia, Deputy Town Manager/Town Clerk **SUBJECT:** Resolution No. 1692-19: Signatories on Accounts		☒ **Action** ☐ **Information Only** ☐ **Public Hearing** ☒ **Resolution** ☐ **Ordinance** ☐ **Regulatory** ☐ **1st Reading** ☐ **2nd Reading** ☐ **Other**
STRATEGIC PLAN REFERENCE: ☐ Community Vitality ☐ Economic Prosperity ☐ Leadership and Governance ☐ Partnerships and Relationships ☐ Transportation and Infrastructure ☒ Statutory ☐ None		

RECOMMENDED MOTION/ACTION:

Adoption of Resolution 1692-19: A RESOLUTION OF THE TOWN OF FLORENCE, PINAL COUNTY, ARIZONA, AUTHORIZING MAYOR TARA WALTER, TOWN MANAGER BRENT BILLINGSLEY, AND INTERIM FINANCE DIRECTOR BECKI JIMENEZ TO ACT AS SIGNATORIES FOR THE TRANSACTION OF BUSINESS ON ALL TOWN OF FLORENCE BANK ACCOUNTS, AND DECLARING AN EMERGENCY

BACKGROUND/DISCUSSION:

A resolution must be adopted naming staff authorized to sign on the Town's bank accounts. New signature cards need to be completed. This resolution will add Interim Finance Director as the appointed signatories for banking functions.

The following accounts are included: National Bank of Arizona General Checking Account, National Bank of Arizona Payroll Account, Local Governmental Investment Pool #7, Local Governmental Investment Pool #5, Stifel, Nicolaus & Company Inc. Investment Account. This resolution will be effective April 1, 2019.

A VOTE OF NO WOULD MEAN:

A no vote would mean that the Town of Florence would not have a financial signatory for banking purposes.

A VOTE OF YES WOULD MEAN:

A yes vote would me that Town of Florence would have three signatories for banking.

FINANCIAL IMPACT:

None

ATTACHMENTS:

Resolution No. 1692-19

RESOLUTION NO. 1692-19

A RESOLUTION OF TOWN OF FLORENCE, PINAL COUNTY, ARIZONA, APPROVING AND AUTHORIZING MAYOR TARA WALTER, TOWN MANAGER BRENT BILLINGSLEY, AND INTERIM FINANCE DIRECTOR BECKI JIMENEZ TO ACT AS SIGNATORIES FOR THE TRANSACTION OF BUSINESS ON THE TOWN OF FLORENCE BANKING ACCOUNTS, AND DECLARING AN EMERGENCY.

WHEREAS, The Town of Florence has appointed Becki Jimenez as Interim Finance Director. The Town requires she be added as signatory to all Town banking accounts, and

WHEREAS, The Town Council must approve new signature authorizations for the Town's bank accounts.

NOW, THEREFORE BE IT RESOLVED, that Mayor Tara Walter, Town Manager Brent Billingsley, and Interim Finance Director Becki Jimenez are authorized as signatories for the following bank accounts:

1. National Bank of Arizona - General Checking and Investment Accounts
2. National Bank of Arizona Payroll Checking Accounts
3. Zions Bank – Community Facility District Accounts
4. Wells Fargo – Community Facility District Accounts
5. State of Arizona Local Governmental Investment Pool-All Accounts
6. Stifel, Nicolaus & Company, Inc. Investment Accounts
7. PFM Investment Accounts

BE IT FURTHER RESOLVED, that the immediate adoption of this resolution is necessary for preservation of the public peace, health and safety of the Town of Florence, and an emergency is hereby declared to exist; and this resolution shall be in full force and effect from the offer of its passage and adoption by the Mayor and Council of the Town of Florence, Arizona, with an effective date of April 1. 2019.

PASSED AND ADOPTED BY the Mayor and Council of the Town of Florence, Arizona, this 1st day of April 2019.

_____
Tara Walter, Mayor

ATTEST:

_____
Lisa Garcia, Town Clerk

APPROVED AS TO FORM:

_____
Clifford L. Mattice, Town Attorney

	TOWN OF FLORENCE COUNCIL ACTION FORM	**AGENDA ITEM 8b.**

MEETING DATE: April 1, 2019

DEPARTMENT: Public Works

STAFF PRESENTER: Christopher A. Salas,
Public Works Director
Town Engineer

SUBJECT: Modify existing contract with Apache Underground utilizing Pine-Strawberry Waterline Replacement and Water Facilities Improvement Construction Work – Job Order Contract dated October 18, 2018 for CIP WU-38 Water line replacement.

- ☒ **Action**
- ☐ **Information Only**
- ☐ **Public Hearing**
- ☐ **Resolution**
- ☐ **Ordinance**
  - ☐ **Regulatory**
  - ☐ **1st Reading**
  - ☐ **2nd Reading**
- ☐ **Other**

STRATEGIC PLAN REFERENCE:

☐ Community Vitality ☐ Economic Prosperity ☐ Leadership and Governance

☐ Partnership and Relationships ☒ Transportation and Infrastructure

☐ Statutory ☐ None

RECOMMENDED MOTION/ACTION:

Approval to modify the existing contract with Apache Underground, utilizing Pine-Strawberry Waterline Replacement and Water Facilities Improvement Construction Work – Job Order Contract, dated October 18, 2018, for CIP WU-38 Water line replacement, in an amount not to exceed $1,314,779.20 (Bid $939,128.00 plus a 40% Town contingency of $375,651.20.

BACKGROUND/DISCUSSION:

The original pricing structure was created based solely on assumed quantities using a Google Earth photograph. No detailed engineering drawings were available at the time. The timing was an overwhelming driver at the time due to the ability to order materials to start the job on time. The original approval has allowed the contractor to order materials and start the Phase 3a portion of the project while the plan for the 8-inch portion of the project was designed. The design has been completed and approved by both the Town and ADEQ. Once the design was completed the plan was sent to the contractor for an updated bid. The Engineering Division has done a complete review of the price discrepancies and finds no fault on the consultant or the contractor. The price difference is merely that the quantities have changed due to the completed design.

The Town is planning to replace existing water lines that are undersized or of an antiquated construction method that is prone to failure. There is a significant amount of the Town's water line infrastructure that is 4-inch or smaller. This sizing configuration is unusual in modern construction and doesn't allow the Town to supply adequate fire flows. The lack of fire flows

is especially true for commercial development or improvements to existing Florence Unified School District (FUSD) buildings. The Town's Water Division spends a significant amount of staff time repairing breaks/leaks in the water lines. There are several factors contributing to the water line breaks;

- Age of infrastructure
- Construction materials
- Construction methods including the lack of joint restraints
- Soil conditions

The Town has budgeted in the CIP to replace water lines where needed over the next two decades.

This particular project will provide the FUSD's kindergarten through 8th grade school (FUSD K8) much improved fire flows as well as the adjacent areas. The line will follow the proposed layout, Exhibit X.

8-inch water line
Elizabeth St., from Collingwood St. to Virginia Ave.
Duron St., from Elizabeth St. to Orlando St.
Virginia Ave., from Elizabeth St. to Orlando St.
Orlando St., from Virginia Ave. to Stewart St.
Stewart St., from Orlando St. to SR79
Park St., from Virginia Ave. to Brady St.

12-inch water line
Collingwood St., from Elizabeth St. to Orlando St.
Orlando St., from Collingwood St. to Virginia Ave.
Virginia Ave., from Orlando St. to Park St.

A VOTE OF NO WOULD MEAN:

Currently the FUSD K8 doesn't have code compliant fire flows. If the contracts to improve the infrastructure are not approved the planned improvements would not be fit to occupy.

A VOTE OF YES WOULD MEAN:

Planned improvements would get completed in time before FUSD K8 additions are completed. All the adjacent areas to the FUSD K8 would receive additional fire flows and improve water pressure.

FINANCIAL IMPACT:

The project amount shall not exceed (Bid $939,128.00 and a 40% Town contingency of $375,651.20) the amount of $1,314,779.20. CIP WU-38 Water line replacement.

Services will be obtained following the Town's Purchasing Policy, Section 5.63 Purchases of $25,000 or More (specifically, 5.6321 of Vendor Selection).

5.632 Vendor Selection

> 5.6321 Alternative purchase methods are identified if approved by necessity or by the Town Manager as indicated by Emergency / Sole Source Purchase, cooperative purchase, state contract or any other method authorized. The Finance Director reviews for budget availability and bidding procedures. The Town Manager reviews for need.

4.12 Purchasing Policy

> Department Heads must approve all purchases regardless of dollar value. This does not preclude the Department Head from obtaining the necessary approval from the Town Manager and/or Town Council, nor does this allow them to have signature authority on contracts. The Town Manager has signature authority on purchases up to $24,999. Town Council is required on any purchases of $25,000 or more.

ATTACHMENTS:

Exhibit A – Scope of Work
Exhibit B – TOF Pipe Layout
Exhibit C – TOF – Apache Underground Bid Response
Exhibit D – Request for Statement of Qualifications JOC PSWID
Exhibit E – Signed Page 40 of JOC with PSWID
Exhibit F – TOF Cooperative Contract with Apache Underground and Excavating LLC
Exhibit G – Approved Bid Tab
Exhibit H – Revised Bid
Exhibit I - 11.5.2018 Town Council Agenda Minutes
Apache JOC
Apache JOC Supplement

EXHIBIT A

TOWN OF FLORENCE, ARIZONA

8" Water Line Extension - ELIZABETH - VIRGINIA - ORLANDO - Proposal

(Part of the CIP WU-83 DOWNTOWN 12" LOOP)

	Description	Bid Qty	UM	Unit Bid Price	Total Bid Price
1	Elizabeth/Orlando - Mobilization	1	LS		
2	Elizabeth/Orlando - Traffic Control	1	LS		
3	Elizabeth/Orlando - Install New 8" PVC Pipe Waterline Per COTW Specifications	2,095	LF		
4	Elizabeth/Orlando - Install New 12” PVC Pipe Waterline Per COTW Specifications	20	LF		
5	8” valves	8	EA		
6	Air/Vacuum Release Valve	1	EA		
7	6” Fire Hydrant	1	EA		
8	12”X8” crosses for tie in and stub out for 12” system	2	EA		
9	Elizabeth/Orlando – Tie-in Existing House Services Per COTW Specifications	28	EA		
10	Elizabeth/Orlando - Cap and Grout Ends Abandon Old Waterline in Place (Using PVC Cap and Grout)	2	EA		
11	Elizabeth/Orlando - Sawcut And Remove Asphalt (Over New Pipe Only)	1,118	SY		
12	Elizabeth/Orlando - Place And Compact 2" Thick MAG Spec Asphalt Above New And Old Pipe On Native Backfill	1,118	SY		
13	Elizabeth/Orlando - Survey Cost	1	LS		
				GRAND TOTAL	

EXHIBIT B

Legend
12-Inch
8-Inch
Pump Station #5
W 16th St
Brady St
E Brady St
S Park St
Collingwood St
E Collingwood St
Circle Dr
Duron St
E Duron St
W 20th St
Virginia Ave
Pump Station #5
San Carlos St
W Adamsville Rd
Feliz St
Quartz St
State Highway 79 Business
E 22nd St
Gressinger St
S San Carlos St
H St
Willow St
Orlando St
Matilda St
Park St
Elliott St
Desoto St
Stewart St
79
Google Earth
© 2013 Google
1000 ft
N

EXHIBIT C

TOWN OF FLORENCE, ARIZONA / APACHE UNDERGROUND AND EXCAVATING

8" Water Line Extension - ELIZABETH - VIRGINIA - ORLANDO - Proposal 9.6.2018

(Part of the CIP WU-83 DOWNTOWN 12" LOOP)

	Description	Bid Qty	UM	Unit Bid Price	Total Bid Price
1	Elizabeth/Orlando - Mobilization	1	LS	9000	9,000.00
2	Elizabeth/Orlando - Traffic Control	1	LS	12000	12,000.00
3	Elizabeth/Orlando - Install New 8" PVC Pipe Waterline Per COTW Specifications	4,000	LF	38	152,000.00
4	Elizabeth/Orlando - Install New 12” PVC Pipe Waterline Per COTW Specifications	1675	LF	75	125,625.00
5	8” valves	8	EA	3000	24,000.00
6	Air/Vacuum Release Valve	1	EA	1520	1,520.00
7	6” Fire Hydrant	17	EA	6500	110,500.00
8	12”X8” crosses for tie in and stub out for 12” system	2	EA	5400	10,800.00
9	Elizabeth/Orlando – Tie-in Existing House Services Per COTW Specifications	N/A	N/A	N/A	0.00
10	Elizabeth/Orlando - Cap and Grout Ends Abandon Old Waterline in Place (Using PVC Cap and Grout)	2	EA	800	1,600.00
11	Elizabeth/Orlando - Sawcut And Remove Asphalt (Over New Pipe Only)	2,523	SY	3	7,569.00
12	Elizabeth/Orlando - Place And Compact 2" Thick MAG Spec Asphalt Above New And Old Pipe On Native Backfill	2,523	SY	42	105,966.00
13	Elizabeth/Orlando - Design and Survey Costs (Allowance)	1	LS	8000	8,000.00
14	2" Water Services	7	EA	3000	21,000.00
15	1" Water Service	59	EA	1500	88,500.00
				GRAND TOTAL	**$ 678,080.00**

X 20% Contingency $135,616.00

TOTAL $813,696.00

EXHIBIT D

NOTICE OF REQUEST
FOR
STATEMENT OF QUALIFICATIONS
WATERLINE REPLACEMENT
AND
WATER FACILITIES IMPROVEMENT PROJECT CONSTRUCTION WORK
JOB ORDER CONTRACTING
FOR
PINE-STRAWBERRY WATER IMPROVEMENT DISTRICT

The Pine-Strawberry Water Improvement District (PSWID) is seeking Statement of Qualifications from experienced contractors to provide Waterline Replacement and Water Facilities Improvement Project Construction Work, and related services, on an as-needed basis at various project locations throughout the PSWID utilizing Job Order Contracting (JOC) project delivery method.

It is the intent of the PSWID to select up to five (5) contractors for contract award. The initial term of the JOC will be for a minimum of one (1) year and may be renewed up to four (4) additional one-year terms. Renewal of the contract will be based on the successful performance of the JOC Contractor and the needs of the PSWID. It is PSWID's intent to enter into a cost plus fee structure.

During the term of the JOC, work is performed as a series of individual job orders. Individual projects may require the expenditure approval of the PSWID Board, or their designee. Each job order, initiated by the owner, is defined cooperatively by the owner and contractor. A scope, schedule and price are negotiated and agreed upon. The contractor is then directed to proceed with the work. Job Order Contracting may include ancillary planning and design services, pre-construction services, construction work, maintenance and as-built/record documentation to comply with Water Infrastructure Finance Authority, (WIFA) loan requirements and other relevant regulatory agency requirements.

Sealed proposals will be received by the PSWID, **in the District Office located at 6306 W. Hardscrabble Road, Pine, AZ 85544 until 2:00 P.M. (AZ Time), July 17, 2018 for Waterline Replacement and Water Facilities Improvement Project Construction Work. No submittals will be accepted after 2:00 P.M on July 17, 2018. The submittals will be publicly opened and read aloud after 2:00 P.M., Arizona time, at the location and date listed above.** All submittals shall be made on the **REQUEST FOR STATEMENT OF QUALIFICATIONS JOB ORDER CONTRACTING WORK** forms included in the Project and Contract Documents and shall include all applicable taxes.

This projects are funded with both PSWID funds and with Water Infrastructure Finance Authority (WIFA) loan funds. Davis-Bacon Wage Requirements, American Iron and Steel Certification and all WIFA requirements will apply to WIFA loan funded projects.

There is a non-mandatory pre-proposal meeting, at 6306 W. Hardscrabble Road, Pine, AZ 85544 in the District Conference room, scheduled for 10:00 A.M. (AZ

Time), July 10, 2018. Project documents may be obtained from the PSWID through Cato Esquivel, Jr., District Manager/Contract Officer, Catoe@pswid.org, 928-476-4222.

Documents may also be downloaded at the District website by going to the following link: **http://pswid.org/**

Each Bid submitted, either by hand, United States Postal Service, or other carrier, shall be sealed and plainly marked **"REQUEST FOR STATEMENT OF QUALIFICATIONS JOB ORDER CONTRACTING WORK WATERLINE REPLACEMENT AND WATER FACILITIES IMPROVEMENT PROJECT CONSTRUCTION WORK."**

All submittals shall be mailed to P.O. Box 134, Pine, AZ 85544 or delivered to the District Office located 6306 W. Hardscrabble Road, Pine, AZ 85544. The PSWID will not be responsible for submittals that are not marked appropriately, sent to the wrong address or returned back to the sender.

Contractors are invited to be present at the opening of bids but absence will not be considered cause for disqualification.

Contractors shall be responsible for any licenses or permits required by the regulatory agency of the State of Arizona that apply to the performance of this contract.

The PSWID reserves the right to reject any or all submittals, or to accept any submittals, or to waive any informality in any submittals, or to withhold the award if deemed in the best interest of the District.

REQUEST FOR STATEMENT OF QUALIFICATIONS
WATER LINE REPLACEMENT
AND WATER FACILITIES IMPROVEMENT PROJECT CONSTRUCTION WORK
JOB ORDER CONTRACTING
FOR PINE-STRAWBERRY WATER IMPROVEMENT DISTRICT

ADDENDUM NO. 1

ISSUE DATE: July 9, 2018

Under Paragraph 4 **Sealed Received Proposals Due Date:**

Change "July 10, 2018" and replace with "July 19, 2018".

Change "July 17, 2018" and replace with "July 26, 2018".

End of ADDENDUM NO. 1

Cato Esquivel
District Manager
Pine-Strawberry Water Improvement District

Pine-Strawberry Water Improvement District

Unit Task for Job Order Contracts

Category	Unit	Size, inch	Material	Specification	Detail	Comment
Pipe	Ft	12	PVC	C900,Class 150, MAG 610		Includes Tees,Elbows, Reducers, Joint Restraint
Pipe	Ft	12	PVC	C900,Class 200, MAG 610		Includes Tees,Elbows, Reducers, Joint Restraint
Pipe	Ft	10	PVC	C900,Class 150, MAG 610		Includes Tees,Elbows, Reducers, Joint Restraint
Pipe	Ft	10	PVC	C900,Class 200, MAG 610		Includes Tees,Elbows, Reducers, Joint Restraint
Pipe	Ft	8	PVC	C900,Class 200, MAG 610		Includes Tees,Elbows, Reducers, Joint Restraint
Pipe	Ft	8	PVC	C900,Class 150, MAG 610		Includes Tees,Elbows, Reducers, Joint Restraint
Pipe	Ft	6	PVC	C900,Class 150, MAG 610		Includes Tees,Elbows, Reducers, Joint Restraint
Pipe	Ft	6	PVC	C900,Class 200, MAG 610		Includes Tees,Elbows, Reducers, Joint Restraint
Pipe	Ft	4	PVC	C900,Class 150, MAG 610		Includes Tees,Elbows, Reducers, Joint Restraint
Pipe	Ft	4	PVC	C900,Class 200, MAG 610		Includes Tees,Elbows, Reducers, Joint Restraint
Pipe	Ft	3	PVC	Schedule 40, MAG 610		Includes Tees,Elbows, Reducers, Joint Restraint
Pipe	Ft	3	PVC	Schedule 80, MAG 610		Includes Tees,Elbows, Reducers, Joint Restraint
Pipe	Ft	2	PVC	Schedule 40, MAG 610		Includes Tees,Elbows, Reducers, Joint Restraint
Pipe	Ft	2	PVC	Schedule 80, MAG 610		Includes Tees,Elbows, Reducers, Joint Restraint
Pipe	Ft	1	PVC	Schedule 40		Includes Tees,Elbows, Reducers, Joint Restraint
Pipe	Ft	1	PVC	Schedule 80		Includes Tees,Elbows, Reducers, Joint Restraint
Pipe	Ft	1	HDPE	ASTM D2239		Includes Tees,Elbows, Reducers, Joint Restraint
Pipe	Ft	1	PEX			Includes Tees,Elbows, Reducers, Joint Restraint
Pipe	Ft	3/4	PVC	Schedule 40		Includes Tees,Elbows, Reducers, Joint Restraint
Pipe	Ft	3/4	HDPE	ASTM D2239		Includes Tees,Elbows, Reducers, Joint Restraint
Pipe	Ft	3/4	PEX			Includes Tees,Elbows, Reducers, Joint Restraint
Pipe	Ft	12	HDPE	AWWA C906		Includes Tees,Elbows, Reducers, Joint Restraint
Pipe	Ft	10	HDPE	AWWA C906		Includes Tees,Elbows, Reducers, Joint Restraint
Pipe	Ft	8	HDPE	AWWA C906		Includes Tees,Elbows, Reducers, Joint Restraint
Pipe	Ft	6	HDPE	AWWA C906		Includes Tees,Elbows, Reducers, Joint Restraint
Pipe	Ft	4	HDPE	AWWA C906		Includes Tees,Elbows, Reducers, Joint Restraint
Pipe	Ft	3	HDPE	AWWA C906		Includes Tees,Elbows, Reducers, Joint Restraint
Pipe	Ft	2	HDPE	AWWA C906		Includes Tees,Elbows, Reducers, Joint Restraint
Elbow	Ea	12	CI			Include Restrained Joint
Elbow	Ea	10	CI			Include Restrained Joint
Elbow	Ea	8	CI			Include Restrained Joint
Elbow	Ea	6	CI			Include Restrained Joint
Elbow	Ea	4	CI			Include Restrained Joint
Elbow	Ea	3	CI			Include Restrained Joint
Elbow	Ea	2	CI			Include Restrained Joint

Tee	Ea	12	CI		Include Restrained Joint
Tee	Ea	10	CI		Include Restrained Joint
Tee	Ea	8	CI		Include Restrained Joint
Tee	Ea	6	CI		Include Restrained Joint
Tee	Ea	4	CI		Include Restrained Joint
Tee	Ea	3	Ci		Include Restrained Joint
Tee	Ea	2	CI		Include Restrained Joint
Cross	Ea	12	CI		Include Restrained Joint
Cross	Ea	10	CI		Include Restrained Joint
Cross	Ea	8	CI		Include Restrained Joint
Cross	Ea	6	CI		Include Restrained Joint
Cross	Ea	4	CI		Include Restrained Joint
Cross	Ea	3	Ci		Include Restrained Joint
Cross	Ea	2	CI		Include Restrained Joint
Gate Valve	Ea	12		MAG 610.7, 630	Includes Valve, box & cover
Gate Valve	Ea	10		MAG 610.7, 630	Includes Valve, box & cover
Gate Valve	Ea	8		MAG 610.7, 630	Includes Valve, box & cover
Gate Valve	Ea	6		MAG 610.7, 630	Includes Valve, box & cover
Gate Valve	Ea	4		MAG 610.7, 630	Includes Valve, box & cover
Gate Valve	Ea	3		MAG 610.7, 630	Includes Valve, box & cover
Gate Valve	Ea	2		MAG 610.7, 630	Includes Valve, box & cover
Air Relief Valve	Ea	3/4		Per AWC DetailE-9-8-3	
Air Relief Valve	Ea	1		Per AWC DetailE-9-8-3	
Service Connection	Ea	2		Per Detail	
Service Connection	Ea	1		Per Detail	
Service Connection	Ea	3/4		Per Detail	
Utility Crossing	Ea	6		Per Detail	Cost in addition to Pipe unit cost
Utility Crossing	Ea	3		Per Detail	Cost in addition to Pipe unit cost
Utility Crossing	Ea	4		Per Detail	Cost in addition to Pipe unit cost
Utility Crossing	Ea	2		Per Detail	Cost in addition to Pipe unit cost
Pavement R & R	SY			Per Detail	3"AC/6"ABC
Pavement R & R	SY			Per Detail	2"AC/6"ABC
Plating of Trenches	LF				Quantity by lenghth of plate based on 4' width

Rock Excavation	CY	As Encountered	Use EPS Spec ??	Cost in addition to unit cost of item
Leakage/Pressure Test	LS		MAG	Per Set Up
Mobilization	LS	Per Job		Includes Demobilization and Incidental Costs
Sawcut Exist Asphalt	LF			
Sawcut Exist Concrete	LF			4"-6" thick
R & R Sidewalk	SF			4"Conc/4"ABC
R & R Driveway	SF			6"Conc/4"ABC
Compaction Testing		Per Half Day		
Crew Time	Hour			Specify rate for workers and equipment

Pine-Strawberry Water Improvement District
Job Order Contract

Statement of Qualifications No:	[Enter Solicitation No.]
Description of Work:	[Enter JOC Work/Project Description]

Location: Pine Strawberry Water Improvement District
Mailing Address: 6306 W. Hardscrabble Road, Pine, AZ 85544

Contact: [Buyer]
Phone: (928) 476-4222

OFFER

[ROC No.]
Contractor's License Number

Job Order Contractor Name

Authorized Signature for Offer

Address

Printed Name

City | State | Zip Code

Title

Telephone | Fax

E-mail

ACCEPTANCE OF OFFER AND CONTRACT AWARD (For PSWID Use Only)

Your offer is hereby accepted. The Contractor is now bound to sell the construction services listed by the attached award notice based upon the solicitation, including all terms conditions, specifications, amendments, etc., of the contract and the Contractor's offer as accepted by the PSWID. The Contractor is hereby cautioned not to commence any billable work or provide any material, service or construction under this contract until Contractor receives an executed Notice to Proceed and Purchase Order.

Attested by:

Robert Arbuthnot, Board Chairman

Pine Strawberry Water Improvement District, Arizona.

Eff. Date: _____

Approved as to form:

Riley Snow, PSWID Attorney

CC

Contract Number

Awarded on _____

Official File

Cato Esquivel Jr., District Manager

JOB ORDER CONTRACT

[Solictation No.]

[Project Title]

CONTRACT FOR CONSTRUCTION

JOB ORDER CONTRACT AGREEMENT
TABLE OF CONTENTS

ARTICLE 1	**DEFINITIONS**
ARTICLE 2	**CONTRACT TERM**
ARTICLE 3	**PERFORMANCE OF THE WORK**
ARTICLE 4	**JOB ORDER DOCUMENTS**
ARTICLE 5	**MATERIAL AND WORKMANSHIP**
ARTICLE 6	**SITE CONDITIONS**
ARTICLE 7	**JOB ORDER SCHEDULES**
ARTICLE 8	**INSPECTION OF CONSTRUCTION AND ACCEPTANCE**
ARTICLE 9	**INVOICING AND PAYMENT**
ARTICLE 10	**CHANGES**
ARTICLE 11	**INSURANCE & BONDS**
ARTICLE 12	**INDEMNIFICATION**
ARTICLE 13	**DISPUTES**
ARTICLE 14	**TERMINATION AND DEFAULT**
ARTICLE 15	**WARRANTY OF CONSTRUCTION**
ARTICLE 16	**STANDARD TERMS AND CONDITIONS**

ATTACHMENTS

ATTACHMENTS

Attachment A	JOC General Scope of Services
Attachment B	RSOQ & Contractor's Response
Attachment C	JOC Cost Proposal Forms (Pricing Matrix, Project Cost Sheet)
Attachment D	Contractor's Contacts & Authorized Signature Form

JOB ORDER CONTRACTING
CONTRACT

THIS CONTRACT is entered into and made effective the _____day of _____, by and between the Pine-Strawberry Water Improvement District (PSWID), Arizona, an Arizona charter municipality (the "Owner"), and _____[Name of Job Order Contractor]__, (the "Job Order Contractor"). The parties agree as follows:

1. DEFINITIONS.

1.1. Owner. Owner means Owner's senior manager, Contracting Officer or a duly authorized representative, which means any person specifically authorized to act for Owner by executing the Contract and any modification thereto. Owner's duties include administration of the Contract, including the negotiation of change orders and modifications and assessing Job Order Contractor's technical performance and progress; inspecting and periodically reporting on such performance and progress during the stated period of performance, and finally certifying as to the acceptance of the Work in its entirety or any portion thereof, as required by the Contract documents.

1.2. Job Order Contractor. Job Order Contractor means Job Order Contractor's senior manager or its duly authorized representative or any person specifically authorized to act for Job Order Contractor by executing the Contract, and any modifications thereto. Job Order Contractor's duties include administration of the Contract and performance of the Work.

1.3. Contract. Contract means this agreement including its attachments and any Job Orders that may be issued.

1.4. Subcontract. Subcontract means any Contract including purchase orders (other than one involving an employer-employee relationship) entered into by Job Order Contractor calling for equipment, supplies or services required for Contract performance, including any modifications thereto.

1.5. Job Order. Job Order means a specific written agreement between the Owner and the Job Order Contractor for Work to be performed under this Contract for an individual, mutually agreed upon scope of work, schedule and price.

1.6. Work. Work means in response to Job Orders that may be mutually agreed upon and issued periodically by Owner, Job Order Contractor shall, except as may be specified elsewhere in the Contract, furnish all necessary labor, materials, tools, supplies, equipment, transportation, supervision, management, and perform all operations necessary and required for planning, survey, design, construction work, and commissioning which will be defined and further described as to specific project requirements in each Job Order. The Work shall be performed in accordance with the requirements set forth in each Job Order and as further specified in ***Attachment "A"***(JOC General Scope of Services), ***Attachment "B"*** (RSOQ & Contractor's Response), ***Attachment "C"*** (JOC Cost Proposal Forms), and in ***Attachment "D"*** (Contractor's Contacts), all of which are incorporated herein and made a part hereof.

1.7. Punch List Preparation. A minimum of thirty (30) days prior to Final Completion the Job Order Contractor, in conjunction with the Owner, shall prepare a comprehensive list of Punch list items, which the Owner may edit and supplement. The Job Order Contractor shall proceed promptly to complete and correct Punch list items. Failure to include an item on the Punch list does not alter the responsibility of the Job Order Contractor to complete all Work in accordance

with the Contract Documents. Warranties required by the Contract Documents shall not commence until the date of Final Completion unless otherwise provided in the Contract Documents.

1.8. Final Completion. Final Completion of the Work shall be deemed to have occurred on the later of the dates that the Work passes a Final Completion inspection and acceptance by the Owner. Final Completion shall not be deemed to have occurred and no final payment shall be due the Job Order Contractor or any of its subcontractors or suppliers until the Work has passed the Final Completion inspection and acceptance and all required Final Completion close-out documentation items has been produced to the Owner by the Job Order Contractor.

1.9. Reference Standards

1.9.1. The "Uniform Standard Specifications for Public Works Construction" and the "Uniform Standard Details for Public Works Construction" which are sponsored and distributed by the Maricopa Association of Governments (MAG), and which are hereinafter referred to as the "MAG Specifications", are hereby adopted as part of these contract documents.

1.9.2. PSWID hereby uses the "Uniform Standard Details for Public Works Construction from the Maricopa County Association of Governments by reference with certain exceptions.

1.9.3. A copy of these documents is available upon request or on the MAG website.

2. CONTRACT TERM

2.1. Contract Term. The term of the Contract shall commence on the date it was executed by both parties and shall continue for a period of one (1) year thereafter in accordance with the terms and conditions of this Contract. By mutual written Contract Amendment, any resultant contract may be extended for supplemental periods of up to a maximum of forty-eight (48) months. Job Orders may be issued at any time during the term of this Contract. This Contract will remain in full force and effect during the performance of any Job Order.

2.2. Job Order. In response to Job Orders that may be mutually agreed upon and issued periodically by Owner, Job Order Contractor shall perform the Work, except as may be specified elsewhere in the Contract, which will be defined and further described as to specific project requirements in each Job Order. The Work shall be performed in accordance with the requirements set forth in each Job Order and as further specified in ***Attachment "A"***(JOC General Scope of Services), ***Attachment "B"*** (RSOQ & Contractor's Response), ***Attachment "C"*** (JOC Cost Proposal Forms), and in ***Attachment "D"*** (Contractor's Contacts), all of which are incorporated herein and made a part hereof.

2.3. Mutual Agreement. This Contract embodies the agreement of Owner and Job Order Contractor to terms and conditions which will govern any Work that may be prescribed under a Job Order that may be issued by Owner and agreed to by Job Order Contractor. Nothing herein shall be construed as requiring Owner to issue any Job Order, nor requiring Job Order Contractor to accept any Job Order, it being the intent that both parties must mutually agree to any specific Work before a Job Order may be issued.

2.4. Cooperative Purchasing: This contract shall be for the use of the PSWID. In addition, specific eligible political subdivisions and nonprofit educational or public health institutions may also participate at their discretion. In order to participate in any the contract, a political subdivision or nonprofit educational or public health institution must have been invited to participate in this specific solicitation and the contractor must be in agreement with the cooperative transaction. In

addition to cooperative purchasing, any eligible agency may elect to participate (piggyback) on the contract; the specific eligible political subdivision, nonprofit educational or public health institution and the contractor must be in agreement. Any orders placed to the contractor will be placed by the specific agencies participating in this purchase. Payment for purchases made under this agreement will be the sole responsibility of each participating agency. The PSWID shall not be responsible for any disputes arising out of transactions made by others.

3. PERFORMANCE OF THE WORK

3.1. Job Order Agreement. Performance of the Work shall be undertaken only upon the issuance of written Job Orders by Owner. Job Orders shall be in accordance with the requirements specified in ***Attachment "A"*** (JOC General Scope of Services), and shall set forth, with the necessary particularity, the following:

3.1.1. Contract number along with Job Order Contractor's name;

3.1.2. Job Order number and date;

3.1.3. The agreed Work and applicable technical specifications and drawings;

3.1.4. The agreed period of performance and, if required by Owner, a work schedule;

3.1.5. The place of performance;

3.1.6. The agreed total price for the Work to be performed;

3.1.7. Submittal requirements;

3.1.8. Owner's authorized representative who will accept the completed Work;

3.1.9. Signatures by the parties hereto signifying agreement with the specific terms of the Job Order; and

3.1.10. Such other information as may be necessary to perform the Work.

3.2. Job Order Contractor Duties and Obligations.

3.2.1. Permits & Responsibilities. Job Order Contractor shall be responsible for processing of drawings, for approval by appropriate oversight bodies; for obtaining any necessary licenses and permits; and for complying with any Federal, State and municipal laws, codes, and regulations applicable to the performance of the Work. Owner will reimburse Job Order Contractor for the actual, documented costs of construction permits required for the performance of the Work. Job Order Contractor shall also be responsible for all damages to persons or property that occur as a result of Job Order Contractor's fault or negligence, and shall take proper safety and health precautions to protect the Work, the workers, the public, and the property of others. Job Order Contractor shall also be responsible for all materials delivered and work performed until completion and acceptance of the entire Work, except for any completed unit of Work which may have been accepted under the Contract.

3.2.2. Self-Performance By The Job-Order-Contractor. The JOC shall be allowed to bid as a subcontractor for work over $50,000 and, if it is the lowest acceptable bidder. Any change orders for self-performed work shall require pre-approval by the owner.

3.2.3. Outdoor Construction Restrictions. PSWID restricts outdoor construction as listed in the following table:

	Construction Type	April 2 – September 29	September 30 – April 1
A	Concrete Work	5:00 a.m. to 7:00 p.m.	6:00 a.m. to 7:00 p.m.
B	Other Construction (within 500 feet of residential area)	6:00 a.m. to 7:00 p.m.	7:00 a.m. to 7:00 p.m.
C	Construction Work (more than 500 feet of residential area)	5:00 a.m. to 7:00 p.m.	5:00 a.m. to 7:00 p.m.

3.2.3.1. No interference with the traffic flow on arterial streets shall be permitted during the hours of 6:00 a.m. to 8:30 a.m. or from 4:00 p.m. to 7:00 p.m. unless prior authorization is obtained in writing by the PSWID Traffic Engineer or their assignee. Specific work hours may be stipulated by the PSWID on the project barricade plan.

3.2.3.2. During off peak hours, the minimum number of lanes shall be two lanes (one in each direction) on streets with four lanes or less and four lanes (two in each direction) on streets with five or more lanes.

3.2.3.3. Night work must have prior authorization from the PSWID. In addition, certain areas of the PSWID may have seasonal or special event restrictions for construction work as designated by the PSWID on a case by case basis.

3.2.4. Jobsite Superintendent. During performance of a Job Order and until the Work is completed and accepted, Job Order Contractor shall directly superintend the Work or assign a competent superintendent who will supervise the performance of Work and is satisfactory to Owner and has authority to act for Job Order Contractor.

3.2.4.1. Job Order Contractor will ensure that the site supervisor for the project is English proficient and that there is at least one English proficient person at the construction site at all times work is being performed in order to communicate with the PSWID's project manager.

3.2.5. Construction Layout. Job Order Contractor shall lay out its work in accordance with the Contract plans and specifications and shall be responsible for all measurements in connection with the layout of the Work. Job Order Contractor shall furnish, at its own expense, all stakes, templates, platforms, equipment, tools, materials, and labor required to layout any part of the Work. Job Order Contractor shall also be responsible for maintaining and preserving all control points established by Owner.

3.2.6. Survey Control Points. Existing survey markers (either brass caps or iron pipes) shall be protected by the Contractor or removed and replaced under direct supervision of the PSWID Engineer or his authorized representatives. Survey monuments shall be constructed to the requirements of MAG Specifications, Section 405, and Standard Details. Lot corners shall not be disturbed without knowledge and consent of the property owner. The Contractor shall replace benchmarks, monuments, or lot corners moved or destroyed during construction at no expense to the Owner. Contractor and his sureties shall be liable for correct replacement of disturbed survey benchmarks except where the Owner elects to replace survey benchmarks using his own forces.

3.2.7. Traffic Regulations. All traffic affected by this construction shall be regulated in accordance with the ADOT/Gila County – Traffic Barricade manual, latest edition, and ADOT/Gila

County in the Traffic Barricade Manual shall be referred to as the PSWID Engineer for interpretation.

At the time of the pre-construction conference, the Contractor shall designate an employee who is well qualified and experienced in construction traffic control and safety to be responsible for implementing, monitoring and altering traffic control measure, as necessary. At the same time the PSWID will designate a representative who will be responsible to see that all traffic control and any alterations are implemented and monitored to the extent that traffic is carried throughout the work area in an effective manner and that manner and that motorists, pedestrians, bicyclists and workers are protected from hazard and accidents.

3.2.7.1. The following shall be considered major streets: All major Parkway, mile (section line), arterial and collector (mid-section line and quarter section line) streets so classified by the PSWID.

3.2.7.2. All traffic control devices required for this project shall be the responsibility of the Contractor. The Contractor shall place advance warnings; **REDUCE SPEED, LOOSE GRAVEL, 25 MPH SPEED LIMIT** and **DO NOT PASS** signs in accordance with the Traffic Barricade Manual.

3.2.7.3. The Contractor shall provide, erect and maintain all necessary flashing arrow boards, barricades, suitable and sufficient warning lights signals and signs, and shall take all necessary precautions for the protection of the work and safety of the public. The Contractor shall provide, erect and maintain acceptable and adequate detour signs at all closures and along detour routes.

3.2.7.4. All barricades and obstructions shall be illuminated at night, and all safety lights shall be kept burning from sunset until sunrise. All barricades and signs used by the Contractor shall conform to the standard design, generally accepted for such purposes.

3.2.7.5. The Contractor shall insure that all existing traffic signs are erect, clean and in full view of the intended traffic at all times. Street name signs at major street intersections shall be maintained erect at all times. If these signs should interfere with construction, the Contractor shall notify the Inspector at least forty eight (48) hours in advance for PSWID personnel to temporarily relocate said signs. The Contractor will re-set all traffic and street name signs to permanent locations when notified by the Engineer that construction is complete unless otherwise stated in the specifications. Payment for this item shall be made at the agreed upon contract allowance price for TRAFFIC CONTROL.

3.2.7.6. The Gila County Engineering Department shall determine if construction activities or traffic hazards at the construction project *require* the use of Police Assistants or AZ Post Certified Peace Officers, alternatively, *if it is determined that* flagmen are *sufficient*, it shall be the Contractor's responsibility to provide adequate personnel including flagmen to direct traffic safely. All PSWID projects shall use only Gila County Sherriff Office or Department of Public Safety Office or their designee has determined that no such assistants or officers are available. Arrangements for Police Assistant or Police Officer services should be made with the liaison officer at the Gila County Sherriff's Office.

3.2.7.7. Manual traffic control shall be in conformity with and approved Traffic Barricade Manual. A traffic control plan shall be submitted to the Gila County Engineering Department indicating whether a need for traffic control exists during the project. The traffic control plan shall

be submitted electronically, and the liaison officer shall be contacted at the Gila County Engineering Department.

3.2.7.8. When traffic hazards at construction sites warrant the use of certified police personnel to direct traffic, arrangement should be made with the liaison officer at the Gila County Sheriff Department.

3.2.7.9. The assembly and turnarounds of the Contractor's equipment shall be accomplished using adjacent local streets when possible.

3.2.7.10. Equipment used and/or directed by the Contractor shall travel with traffic at all times. Supply trucks shall travel with traffic except when being spotted. Provide a flagman or officer to assist with this operation.

3.2.7.11. During construction, it may be necessary to alter traffic control. Alterations shall be in accordance with the approved Traffic Barricade Manual.

3.2.7.12. No street within this project may be closed to through traffic or to local emergency traffic without prior written approval of the PSWID. Written approval may be given if sufficient time exists to allow for notification of the public at least two (2) days in advance of such closing. Partial closure of streets within the project shall be done in strict conformity with written directions to be obtained from the PSWID.

3.2.7.13. Caution should be used when excavating near intersections with traffic signal underground cable. Notify the PSWID twenty four (24) hours in advance of any work at such intersections. The Contractor shall install and maintain temporary overhead traffic signal cable as specified by the PSWID when underground conduit is to be severed by excavations at intersections. The Contractor shall provide an off-duty uniformed police officer to direct traffic while the traffic signal is turned off and the wiring is transferred. All damaged or modified traffic signal overhead and underground items shall be repaired and restored to the PSWID's satisfaction. Magnetic detector loops shall under no circumstances be spliced.

3.2.7.14. The Contractor shall address how local access to adjacent properties will be handled in accordance with the specification herein.

3.2.7.15. Where crossings of existing pavements occur, no open trenches shall be permitted overnight, but plating may be permitted if conditions allow as determined by the PSWID or authorized representative. If plates cannot be used, crossings shall be back-filled or the Contractor shall provide a detour.

3.2.8. <u>Operations & Storage</u>. Job Order Contractor shall confine all operations (including storage of materials) to areas authorized or approved by Owner.

3.2.9. <u>Cleaning Up & Refuse Disposal</u>. Job Order Contractor shall at all times keep the site, including storage areas, free from accumulations of waste materials. Before completing the Work, Job Order Contractor shall remove from the premises any rubbish, tools, scaffolding, equipment, and materials that are not the property of Owner. Upon completing the Work, Job Order Contractor shall leave the site in a clean and orderly condition satisfactory to Owner.

3.2.9.1. Final cleanup of the premises shall be included in the period of performance of the Job Order.

3.2.9.2. Job Order Contractor shall be responsible for all construction refuse disposal containers and their removal from the site.

3.2.9.3. Disposal of any hazardous materials not addressed and priced in the Job Order will be segregated for disposal by Owner unless Owner requires Job Order Contractor to dispose of the materials in which case, an equitable adjustment in the price will be negotiated and agreed.

3.2.9.4. The Contractor and/or subcontractor shall be required to use approved solid waste disposal services. This requirement is not intended to preclude other methods or means for hauling debris or excess material from the project site such as trucking large volumes of material, including soil, building demolition, or hazardous and special wastes. The intent is to use approved solid waste service where standard waste disposal is needed. Specifically, all roll-off and front-load containers used on a PSWID construction site shall be contracted for through an approved solid waste provider. It is the contractor's responsibility to contact and make all necessary arrangements for these services. All charges for these services are the responsibility of the contractor.

3.2.10. Existing Improvements and Utilities. Job Order Contractor shall protect from damage all existing improvements and utilities at or near the site and on adjacent property of third parties, the locations of which are made known to or should be known by Job Order Contractor. Job Order Contractor shall repair any damage to those facilities, including those that are the property of third parties, resulting from failure to comply with the requirements of the Job Order or failure to exercise reasonable care in performing the Work. If Job Order Contractor fails or refuses to repair the damage promptly, Owner may have the necessary repair work performed and charge the cost to Job Order Contractor.

3.2.11. Safety. Job Order Contractor shall be responsible for compliance with all safety rules and regulations of the Federal Occupational Safety and Health Act of 1970 (OSHA), all applicable state and local laws, ordinances, and regulations during the performance of the Work. Job Order Contractor shall indemnify Owner for fines, penalties, and corrective measures that result from the acts of commission or omission of Job Order Contractor, its subcontractors, if any, agents, employees, and assigns and its failure to comply with such safety rules and regulations.

3.2.11.1. Job Order Contractor Safety Compliance. Job Order Contractor shall furnish and enforce the use of individual protective equipment as needed to complete the Work, including hard hats, rain gear, protective foot wear, protective clothing and gloves, eye protection, ear protection, respirators, safety belts, safety harnesses, safety lifelines and lanyards, and high visibility reflective safety vests.

3.2.11.2. Job Order Contractor Provided Warnings. Job Order Contractor shall provide warning signs, barricades and verbal warnings as required.

3.2.11.3. Emergency Procedures. Job Order Contractor shall inform its employees of emergency procedures to be adhered to in case of a fire, medical emergency, or any other life-threatening situations.

3.2.11.4. Accident Notification. Job Order Contractor shall promptly notify Owner of any recordable accident involving personnel or damage to material and equipment. Copies of any injury reports or accident investigation reports shall be provided to the Owner.

3.2.11.5. Jobsite Safety Documents. Job Order Contractor shall maintain a set of OSHA articles and Material Safety Data Sheets (MSDS) at the jobsite office as they apply to the Work being performed. Copies shall be provided to Owner when requested.

3.2.11.6. Job Order Contractor's Safety Program. Job Order Contractor shall submit to Owner a copy of its safety policies and program procedures which establish the safety rules and

regulations as they are to be applied to performance of the Work. These documents shall be submitted by Job Order Contractor within fourteen (14) calendar days after issuance of the initial Job Order and prior to the commencement of the Work.

3.2.11.7. Job Order Contractor Safety Representative. Job Order Contractor shall assign, during performance of the Work, a designated safety representative to develop and monitor the project safety program. The name, company address, and telephone number of the assigned individual shall be submitted to Owner by Job Order Contractor along with its safety policies and program procedures.

3.2.11.8. Emergency Medical Treatment. Job Order Contractor shall make available for its employees and those of its subcontractors, while they are performing Work on the site, emergency medical treatment either at the site or at a nearby medical facility.

3.2.11.9. Owner's Right to Monitor. Owner reserves the right to approve and monitor Job Order Contractor's safety policies and program procedures as applied during performance of the Work. Failure to comply with safety policies and program procedures, once approved by Owner, shall be cause for the termination of the Job Order in accordance with ***§ 14***.

3.2.11.10. First Aid Kit. Job Order Contractor shall provide and maintain on the jobsite, at all times when Work is in progress, a completely stocked first aid kit which contains all standard emergency medical supplies.

3.2.11.11. Fire Extinguisher. Job Order Contractor shall provide and maintain on the jobsite, at all times when Work is in progress, a fully charged fire extinguisher appropriate for the potential fire hazard.

3.2.12. Dissemination of Contract Information. Job Order Contractor shall not publish, permit to be published, or distribute for public consumption, any information, oral or written, concerning this Contract, any Job Order or the Work performed under this Contract, without the prior consent of Owner.

3.2.13. Shop Drawings. Job Order Contractor's duties under this Contract include the preparation of shop drawings or sketches necessary to permit orderly construction of Owner's design plans. Job Order Contractor agrees to provide detailed design drawings and plans if requested by Owner.

3.2.14. Jobsite Drawings and Specifications. Job Order Contractor shall keep on the Work site a copy of the drawings and specifications and shall at all times give Owner access thereto.

3.3. Owner Rights and Obligations.

3.3.1. Suspension of Work.

3.3.1.1. Owner's Written Order. Owner may order Job Order Contractor, in writing, to suspend, delay, or interrupt all or any part of the Work for a period of time that Owner determines reasonably appropriate.

3.3.1.2. Work Delay or Suspension. If the performance of all or any part of the Work is suspended, delayed, or interrupted by an act of Owner in the administration of a Job Order, or by Owner's failure to act within the time specified in the Job Order, an adjustment shall be made for any increase in the cost of performance of the Job Order necessarily caused by the suspension, delay, or interruption, and the Job Order will be modified in writing accordingly.

3.3.1.3.Job Order Contractor Costs. A claim under this Subparagraph 3.3.1 shall not be allowed for any costs incurred more than thirty (30) calendar days before Job Order Contractor shall have notified Owner in writing of the act or failure to act (but this requirement shall not apply as to a claim resulting from a suspension order), and unless the claim, in an amount stated, is asserted in writing as soon as practicable after the termination of such suspension, delay, or interruption, but not later than the date of final payment under the Job Order.

3.3.2. Owner's Right to Possession. Owner shall have the right to take possession of or use any completed or partially completed part of the Work. Before taking possession of or using any Work, Owner shall furnish Job Order Contractor a list of items of work remaining to be performed or corrected on those portions of the Work that Owner intends to take possession of or use. However, failure of Owner to list any item of Work shall not relieve Job Order Contractor of responsibility for complying with the terms of this Contract. Owner possession or use shall not be deemed an acceptance of any Work under this Contract.

3.3.2.1.Owner's Possession or Use. While Owner has such possession or use, Job Order Contractor shall be relieved of the responsibility for the loss of or damage to the Work resulting from Owner's possession or use, notwithstanding the terms of Subparagraph 3.2.1. If prior possession or use by Owner delays the progress of the Work or causes additional expense to Job Order Contractor, an equitable adjustment shall be made in the Job Order price or the period of performance, and the Job Order shall be modified in writing accordingly.

3.3.3. Other Contracts. Owner may undertake or award other Contracts for additional work at or near the site of Work under this Contract. Job Order Contractor shall fully cooperate with the other Job Order Contractors and with Owner's employees and shall carefully adapt scheduling and performing the Work under this Contract to accommodate the additional work, heeding any direction that may be provided by Owner. Job Order Contractor shall not commit or permit any act that will interfere with the performance of its Work by any other contractor or by Owner's employees.

3.4. Job Order Amendment. Job Orders may be amended by Owner in the same manner as they are issued.

3.5. Job Order Value. The maximum Job Order value is Three Million Dollars ($3,000,000), except as provided by § 16.32.1.

4. JOB ORDER DOCUMENTS

4.1. Specification and Drawings. Anything mentioned in the specifications and not shown on the drawings, or shown on the drawings and not mentioned in the specifications, shall be of like effect as if shown or mentioned in both. In case of differences between drawings and specifications, the drawings shall govern. In case of discrepancy either in the figures, in the drawings, or in the specifications, the matter shall be promptly submitted to Owner, who shall promptly make a determination in writing. Any adjustment by Job Order Contractor without such a determination shall be at its own risk and expense. Owner shall furnish from time to time such detail drawings and other information as considered necessary, unless otherwise provided.

4.1.1. Wherever in the specifications or upon the drawings the words "directed," "required," "ordered," "designated," "prescribed," or words of like import are used, it shall be understood that the "direction," "requirement," "order," "designation," or "prescription," of Owner is intended and similarly the words "approved," "acceptable," "satisfactory," or words of like import

shall mean "approved by," or "acceptable to," or "satisfactory to" Owner, unless otherwise expressly stated.

4.1.2. Where "as shown," "as indicated," "as detailed," or words of similar import are used, it shall be understood that the reference is made to the drawings accompanying the Contract unless stated otherwise. The word "provided" as used herein shall be understood to mean "provide complete in place," that is "furnished and installed.

4.2. Shop Drawings. Shop drawings include sketches, diagrams, layouts, schematics, descriptive literature, illustrations, schedules, performance and test data, and similar materials furnished by Job Order Contractor to explain in detail specific portions of the Work. Owner may duplicate, use, and disclose in any manner and for any purpose shop drawings delivered under the Contract. Shop drawings means drawings submitted to Owner by Job Order Contractor showing in detail:

4.2.1. The proposed fabrication and assembly of structural elements and,

4.2.2. The installation (i.e., form, fit and attachment details) of materials or equipment.

4.2.3. The construction and detailing of elements of the Work.

4.3. Shop Drawing Coordination. Job Order Contractor shall coordinate all shop drawings, and review them for accuracy, completeness, and compliance with Contract requirements and shall indicate its approval thereon as evidence of such coordination and review. Shop drawings submitted to Owner without evidence of Job Order Contractor's approval may be returned for resubmission. Owner will indicate its approval or disapproval of the shop drawings and if not approved as submitted shall indicate Owner's reasons therefore. Any work done before such approval shall be at Job Order Contractor's risk. Approval by Owner shall not relieve Job Order Contractor from responsibility for any errors or omissions in such drawings, nor from responsibility for complying with the requirements of the Contract, except with respect to variations described and approved in accordance with ***§ 4.4*** below.

4.4. Shop Drawing Modifications. If shop drawings show variations from the Job Order requirements, Job Order Contractor shall describe such variations in writing, separate from the drawings, at the time of submission. If Owner approves any such variation, Owner shall issue an appropriate Contract modification, except that, if the variation is minor and does not involve a change in price or in time of performance, a modification need not be issued.

4.5. Shop Drawing Omissions. Omissions from the drawings or specifications or the mis-description of details of work which are manifestly necessary to carry out the intent of the drawings and specifications, or which are customarily performed, shall not relieve Job Order Contractor from performing such omitted or mis-described details of the Work but they shall be performed as if fully and correctly set forth and described in the drawings and specifications.

4.6. Owner Furnished Drawings. Job Order Contractor shall check all Owner furnished drawings immediately upon receipt and shall promptly notify Owner of any discrepancies. Any errors or omissions in Owner furnished drawings are the responsibility of the Owner to rectify, including associated costs. Figures marked on drawings shall be followed in preference to scale measurements. Large scale drawings shall govern small scale drawings. Job Order Contractor shall compare all drawings and verify the figures before laying out the Work and will be responsible for any errors which might have been avoided thereby.

4.7. Shop Drawing Submittal. Job Order Contractor shall submit to Owner for approval an appropriate number of copies of all shop drawings as called for under the various headings of these specifications. Sets of all shop drawings will be retained by Owner and one set will be returned to Job Order Contractor with annotation of approval or rejection within one (1) week after submission, unless a longer review period is necessary by mutual agreement between Owner and Job Order Contractor.

4.8. Use of Job Order Documents. All drawings (to include as-built drawings), sketches, designs, design data, specifications, note books, technical and scientific data provided to Job Order Contractor or developed by Job Order Contractor pursuant to the Contract and all photographs, negatives, reports, findings, recommendations, data and memoranda of every description relating thereto, as well as all copies of the foregoing relating to the Work or any part thereof, shall be the property of Owner and may be used by Owner without any claim by Job Order Contractor for additional compensation, unless such material developed by Job Order Contractor does not result in an issued Job Order. In such cases, Job Order Contractor will receive reasonable reimbursement for the development of such materials before Owner uses them in any manner whatsoever. In addition, Owner agrees to hold Job Order Contractor harmless to the extent permitted by law from any legal liability arising out of the Owner's use of such materials.

5. MATERIAL AND WORKMANSHIP

5.1. Suitability of Material and Equipment. All equipment, material, and articles incorporated in the Work covered by this Contract shall be new and of the most suitable grade for the purpose intended, unless otherwise specifically provided in the Contract. References in the specifications to equipment, material, article, or patented process by trade name, make, or catalog number, shall be regarded as establishing a standard of quality and shall not be construed as limiting competition. Job Order Contractor may, at its option, use any equipment, material, article, or process that, in the sole judgment and prior written approval of the Owner, is equal to that named in the specifications.

5.2. Owner Approval. Job Order Contractor shall obtain Owner's approval of the equipment to be incorporated into the Work. When requesting approval, Job Order Contractor shall furnish to Owner the name of the manufacturer, the model number, and other information concerning the performance, capacity, nature, and rating of the equipment. When required by the Contract or by Owner, Job Order Contractor shall also obtain Owner's approval of the material or articles which Job Order Contractor contemplates incorporating into the Work. When requesting approval, Job Order Contractor shall provide full information concerning the material or articles. When directed to do so, Job Order Contractor shall submit samples for approval. Machinery, equipment, material and articles that do not have the required approval shall be installed or used at the risk of subsequent rejection.

5.3. Testing of Materials. Unless otherwise specified in a Job Order, the Job Order Contractor shall be responsible for any required testing of materials prior to incorporation into the Work. Reimbursement for testing required by third party entities will be included in the individual Job Order.

5.4. Workmanship. All work under the Contract shall be performed in a skillful and workmanlike manner.

6. SITE CONDITIONS

6.1. **Site Investigation.** Job Order Contractor acknowledges that it has taken steps reasonably necessary to ascertain the nature and location of the Work, and that it has investigated and satisfied itself as to the general and local conditions which can affect the Work or its cost, including but not limited to:

6.1.1. Conditions bearing upon transportation, disposal, handling, and storage of materials;

6.1.2. The availability of labor, water, electric power, and roads;

6.1.3. Uncertainties of weather, river stages, tides, or similar physical conditions at the site;

6.1.4. The visible conformation and conditions of the ground; and

6.1.5. The character of equipment and facilities needed preliminary to and during work performance.

6.2. **Surface and Subsurface Investigation.** Job Order Contractor also acknowledges that it has satisfied itself as to the character, quality, and quantity of surface and subsurface materials or obstacles to be encountered insofar as this information is reasonably ascertainable from an inspection of the site, including all exploratory work done by Owner, as well as from the drawings and specifications made a part of this Contract. Owner will provide to Job Order Contractor all subsurface investigation reports it has commissioned, and has knowledge of, that reasonably reflect expected conditions at the location of the Job Order.

6.3. **Differing Site Conditions.** Job Order Contractor shall promptly, and before the conditions are disturbed, give a written notice to Owner of:

6.3.1. Subsurface or latent physical conditions at the site which differ materially from those indicated in the Contract, or

6.3.2. Unknown physical conditions at the site, of an unusual nature, which differ materially from those ordinarily encountered and generally recognized as inherent in work of the character provided for in the Contract.

6.4. **Owner Investigation.** Owner shall investigate the site conditions promptly after receiving the notice. If the conditions do materially so differ and cause an increase or decrease in Job Order Contractor's cost of, or the time required for, performing any part of the Work, whether or not changed as a result of the conditions, an equitable adjustment shall be made and the Job Order modified in writing accordingly.

6.5. **Written Notice of Differing Site Conditions.** No request by Job Order Contractor for an equitable adjustment to a Job Order under this ***§ 6*** shall be allowed, unless Job Order Contractor has given the written notice required.

6.6. **Payment Adjustment.** No request by Job Order Contractor for an equitable adjustment to a Job Order for differing site conditions shall be allowed if made after final payment under such Job Order.

7. JOB ORDER SCHEDULES

7.1. **Construction Schedule.** If the Job Order Contractor fails to submit a schedule with the Job Order, Owner may withhold approval of progress payments until Job Order Contractor submits the required schedule. If required, the Job Order Contractor will submit for approval with

the signed Job Order a practicable schedule showing the sequence in which Job Order Contractor proposes to perform the Work, and the dates on which Job Order Contractor contemplates starting and completing the several salient features of the Work (including acquiring materials, plant and equipment). The schedule may be a formal computerized schedule or a progress chart in a bar chart format of suitable scale to indicate appropriately the percentage of Work scheduled for completion by any given date during the period. In either case, the basic information should be the same and the schedule or chart must contain as a minimum:

7.1.1. A detailed list of work activities or work elements.

7.1.2. Show the logical dependencies (ties) to indicate what Work must be accomplished before other Work can begin.

7.1.3. Show early start and early finish dates along with late start and late finish dates for each work activity or work element.

7.2. **Failure to Submit Schedule.** Failure of Job Order Contractor to comply with the requirements of Owner under this clause shall be grounds for a determination by Owner that Job Order Contractor is not prosecuting the Work with sufficient diligence to ensure completion within the time specified in the Job Order. Upon making this determination, Owner may terminate Job Order Contractor's right to proceed with the Work if not cured within seven (7) days after written notice is provided, or any separable part of it, in accordance with ***§ 14***.

7.3. **Progress Report.** Job Order Contractor shall submit a progress report every thirty (30) days, or as directed by Owner, and upon doing so shall immediately deliver a current schedule to Owner if it has materially changed since the last submission of a schedule. If Job Order Contractor falls behind the approved schedule, Job Order Contractor shall take steps necessary to improve its progress, including those that may be reasonably required by Owner. Without additional cost to Owner, Owner may require Job Order Contractor to increase the number of shifts, overtime operations, days of work, and/or the amount of construction plant or equipment, and to submit for approval any supplementary schedule or schedules in chart form as Owner deems necessary to demonstrate how the approved rate of progress will be regained.

7.4. **Emergency Work.** Job Order Contractor will give top priority to any emergency Work Owner may have and will allocate all resources necessary to accomplish such Work in accordance with Owner's schedule requirements. To the extent the Job Order Contractor incurs additional cost, expense or schedule delay in performing Owner's emergency Work, Owner will equitably adjust the Contract in accordance with ***§ 10***.

8. INSPECTION OF CONSTRUCTION AND ACCEPTANCE

8.1. **Job Order Contractor Inspection System.** Job Order Contractor shall maintain an adequate inspection system and perform such inspections as will ensure that the Work called for conforms to Job Order requirements. Job Order Contractor shall maintain complete inspection records and make them available to Owner. All work shall be conducted under the general direction of Owner and is subject to inspection and test by Owner at all places and at all reasonable times before acceptance to ensure strict compliance with the terms of the Contract.

8.2. **Owner Inspections and Tests.** Owner inspections and tests are for the sole benefit of Owner and do not:

8.2.1. Relieve Job Order Contractor of responsibility for providing adequate quality control measures;

8.2.2. Relieve Job Order Contractor of responsibility for damage to or loss of the material before acceptance;

8.2.3. Constitute or imply acceptance; or

8.2.4. Affect the continuing rights of Owner after acceptance of the complete work.

8.3. Job Order Contractor Responsibilities. The presence or absence of an inspector does not relieve Job Order Contractor from any Contract requirement, nor is the inspector authorized to change any term or condition of the specification without Owner's written authorization.

8.4. Job Order Contractor Performance. Job Order Contractor shall promptly furnish, without additional charge, all facilities, labor, and material reasonably needed for performing such safe and convenient inspections and tests as may be required by Owner. Owner may charge to Job Order Contractor any additional cost of inspection or test when Work is not ready at the time specified by Job Order Contractor for inspection or test, or when prior rejection makes re-inspection or retest necessary. Owner shall perform all inspections and tests in a manner that will not unnecessarily delay the Work. Special, full size and performance tests shall be performed as described in the Job Order.

8.5. Job Order Contractor Corrective Work. Job Order Contractor shall, without charge, replace or correct Work found by Owner not to conform to Job Order requirements, unless Owner consents to accept the Work with an appropriate adjustment in Contract price. Job Order Contractor shall promptly segregate and remove rejected material from the premises.

8.6. Failure to Replace or Correct Work. If Job Order Contractor does not promptly replace or correct rejected Work, Owner may:

8.6.1. By Contract or otherwise, replace or correct the Work and charge the cost to Job Order Contractor; or

8.6.2. Terminate for default Job Order Contractor's right to proceed.

8.7. Owner Inspection before Acceptance. If, before acceptance of the entire Work, Owner decides to examine already completed Work by removing it or tearing it out, Job Order Contractor, on request, shall promptly furnish all necessary facilities, labor, and material. If the Work is found to be defective or nonconforming in any material respect due to the fault of Job Order Contractor or its subcontractors, Job Order Contractor shall bear the expenses of the examination and of satisfactory reconstruction. However, if the Work is found to meet requirements, Owner shall make an equitable adjustment for the additional services involved in the examination and reconstruction, including, if completion of the Work was thereby delayed, an extension of the period of time for performance.

8.8. Owner Acceptance. Unless otherwise specified in the Job Order, Owner shall accept, as promptly as practicable after completion and inspection, all work required by the Job Order or that portion of the Work that the Owner determines can be accepted separately. Acceptance shall be final and conclusive except for latent defects, fraud, gross mistakes amounting to fraud, or Owner's rights under any warranty or guarantee.

9. INVOICING AND PAYMENT

9.1. Compensation. As full consideration for the satisfactory performance by Job Order Contractor of Work prescribed under the Contract, Owner shall pay Job Order Contractor the amounts specified in the individual Job Orders.

9.2. **Invoices.** Job Order Contractor shall submit invoices to the following address:

PSWID
6306 W. Hardscrabble Road
Pine, AZ 85544

9.3. **Job Order Cost Proposal Structure.** For each Job Order, the Job Order Contractor shall prepare a Job Order Cost Proposal with the sufficient level of cost detail as required by the Owner. Cost detail may include, but is not limited to: schedule of values, work schedule, direct labor cost and fringe benefits, direct material costs (supported by quotes), direct equipment costs (supported by quotes), cost of subcontractors (supported by quotes) and allowable indirect costs (includes insurance). The contractor shall utilize the markups established in the JOC Pricing Matrix (***Attachment C***) to calculate the overhead and profit for all Job Order Cost Proposals, unless otherwise requested by the Owner. Profit on subcontractors/subconsultants shall not exceed 5 percent.

9.4. **Progress Payments.** Owner shall make progress payments monthly as the Work proceeds, or at more frequent intervals as determined by Owner, on estimates of Work completed submitted by the Job Order Contractor and approved by Owner. Job Order Contractor shall use an acceptable invoice form and shall include supporting documents to reflect a breakdown of the total price showing the amount included therein for each principal category of the Work, in such detail as requested, to provide a basis for determining progress payments. In the estimation of Work completed, Owner will authorize payment for material delivered on the site and preparatory work done if Job Order Contractor furnishes satisfactory evidence that it has acquired title to such material and that the material will be used to perform the Work.

9.5. **Retention.** Shall be determined on a Case by Case basis and defined and agreed to for each individual Job Order.

9.6. **Owner's Property.** All material and work covered by progress payments made shall, at the time of payment, become the sole property of Owner, but this provision shall not be construed as:

9.6.1. Relieving Job Order Contractor from the sole responsibility for all material and Work upon which payments have been made or the restoration of any damaged Work prior to final acceptance of the Job Order by the Owner; or

9.6.2. Waiving the right of Owner to require the fulfillment of all of the terms of the Contract.

9.7. **Approval and Certification.** An estimate of the Work submitted shall be deemed approved and certified for payment after seven days from the date of submission unless before that time the Owner or Owner's agent prepares and issues a specific written finding setting forth those items in detail in the estimate of the Work that are not approved for payment under this contract. The Owner may withhold an amount from the progress payment sufficient to pay the expenses the Owner reasonably expects to incur in correcting the deficiency set forth in the written finding. The progress payments shall be paid on or before fourteen days after the estimate of the Work is certified and approved. The estimate of the Work shall be deemed received by the Owner on submission to any person designated by the Owner for the submission, review or approval of the estimate of the Work.

9.8. **Unpaid Amounts.** Owner shall pay all unpaid amounts due Job Order Contractor under this Contract within thirty (30) days, after:

9.8.1. Completion and acceptance of the Work;

9.8.2. Presentation of a properly executed invoice and supporting documentation;

9.8.3. Presentation of release of all claims against Owner arising by virtue of the Contract, other than claims, in stated amounts, that Job Order Contractor has specifically accepted from the operation of the release. A release may also be required of the assignee if Job Order Contractor's claim to amounts payable under this Contract has been assigned. Job Order Contractor shall complete a Job Order Contractor's release form acceptable to Owner; or

9.8.4. Consent of Job Order Contractor's surety, if any.

10. CHANGES

10.1. Owner Changes. Owner may, at any time, without notice to the sureties, if any, by written order designated or indicated to be a change order, make changes in the Work within the general scope of the Job Orders, including changes:

10.1.1. In the specifications (including drawings and designs);

10.1.2. In Owner-furnished facilities, equipment, materials, services, or site; or

10.1.3. Directing acceleration in the performance of the Work, or otherwise altering the schedule for performance of the Work.

10.2. Owner Change Orders. Any other written order (which, as used in this paragraph, includes direction, instruction, interpretation, or determination) from Owner that causes a change shall be treated as a change order under this ***§ 10***; provided, that Job Order Contractor gives Owner timely written notice stating the date, circumstances, and source of the order and that Job Order Contractor regards the order as a change order.

10.3. Contract Adjustments. Except as provided in this ***§ 10***, no order, statement, or conduct of Owner shall be treated as a change under this ***§ 10*** or entitle Job Order Contractor to an equitable adjustment hereunder.

10.4. Modification of the Job Order. If any change under this ***§ 10*** causes an increase or decrease in Job Order Contractor's cost of, or the time required for, the performance of any part of the Work under a Job Order, whether or not changed by any such order, Owner shall negotiate an equitable adjustment and modify the Job Order in writing.

10.5. Job Order Contractor Proposal. Job Order Contractor must submit any proposal under this ***§ 10*** within thirty (30) calendar days after:

10.5.1. Receipt of a written change order under ***§ 10.1*** above; or

10.5.2. The furnishing of a written notice under ***§ 10.2*** above by submitting to Owner a written statement describing the general nature and amount of the proposal, unless this period is extended by Owner. The statement of proposal for adjustment may be included in the notice under ***§ 10.2*** above.

10.6. Final Payment Limitation. No proposal by Job Order Contractor for an equitable adjustment shall be allowed if asserted after final payment under the Job Order.

10.7. Job Order Contractor Extension Justification. Job Order Contractor shall furnish to the Owner a written proposal for any proposed extension in the period of performance. The proposal shall contain a price breakdown and period of performance extension justification.

10.8. Job Order Contractor Price Breakdown Structure. Job Order Contractor, in connection with any proposal it makes for a Job Order change shall furnish a price breakdown itemized as required by Owner and the pricing matrix as required in the awarded contract.

11. INSURANCE & BONDS

11.1. Job Order Contractor Insurance. Job Order Contractor shall purchase and maintain in effect during the term of this Contract insurance of the types and with minimum limits of liability as stated below. Such insurance shall protect Job Order Contractor and Owner from claims which may arise out of or result from Job Order Contractor's operations whether such operations are performed by Job Order Contractor or by any subcontractor or by anyone for whose acts any of them may be liable.

11.1.1. WORKERS' COMPENSATION INSURANCE providing statutory benefits in accordance with the laws of the State of Arizona or any Federal statutes as may be applicable to the Work being performed under this Contract.

11.1.2. EMPLOYER'S LIABILITY INSURANCE with limits of liability not less than: $1,000,000 Each Accident; $1,000,000 Each Employee for Disease; and $1,000,000 Policy Limit for Disease.

11.1.3. COMMERCIAL GENERAL LIABILITY INSURANCE including Products/Completed Operations and Contractual Liability with limits of liability not less than: $2,000,000 General Aggregate; $2,000,000 Products/Completed Operations Aggregate; and $2,000,000 Each Occurrence.

11.1.4. AUTOMOBILE LIABILITY INSURANCE covering all owned, hired and non-owned motor vehicles used in connection with the Work being performed under this Contract with limits of liability not less than: $1,000,000 Each Person for Bodily Injury; $1,000,000 Each Accident for Bodily Injury; and $1,000,000 Each Occurrence for Property Damage.

11.2. Owner as Additional Insured. The policies providing Commercial General Liability and Automobile Liability insurance as required in ***§ 11.1*** shall be endorsed to name Owner as Additional Insured. Such insurance as is provided herein shall be primary and non-contributing with any other valid and collectible insurance available to Owner.

11.3. Policy Endorsement. All policies providing Job Order Contractor's insurance as required in ***§ 11.1*** above shall be endorsed to provide the following:

11.3.1. Thirty days written notice of cancellation or non-renewal given to Owner at the address designated in ***§ 16.2***.

11.3.2. Waiver of subrogation in favor of Owner.

11.4. Limits of Liability. The limits of liability as required above may be provided by a single policy of insurance or by a combination of primary, excess or umbrella policies. But in no event shall the total limits of liability available for any one occurrence or accident be less than the amount required above.

11.5. Certificate of Insurance. Proof of compliance with these insurance requirements shall be furnished Owner in the form of an original certificate of insurance signed by an authorized representative or agent of the insurance company(ies) within ten (10) days of execution of this agreement. Renewal or replacement certificates shall be furnished Owner not less than twenty-one (21) days prior to the expiration or termination date of the applicable policy(ies).

11.6. Subcontractor Insurance. Job Order Contractor shall require any and all subcontractors performing Work under this Contract to carry insurance of the types and with limits of liability as Job Order Contractor shall deem appropriate and adequate for the Work being performed. Job Order Contractor shall obtain and make available for inspection by Owner upon request current certificates of insurance evidencing insurance coverages carried by such subcontractors.

11.7. Bonds. If required by Owner, Job Order Contractor shall furnish Performance and Payment Bonds, each in an amount equal to one hundred percent (100%) of the Construction Work, (excluding design and pre-construction services) in a penal sum equal to the aggregate price of all Job Orders issued to the Job Order Contractor. The Performance and Payment Bonds must be submitted to Owner within ten (10) calendar days after issuance of a Job Order.

11.8. Notice to Proceed. Notice to Proceed will not be issued until properly executed bonds and insurance documentation are received and accepted by Owner. A separate Notice to Proceed will be issued for each Job Order. The Notice to Proceed shall stipulate the actual contract start date, the contract duration and the contract completion date. The time required for the Contractor to obtain permits, licenses and easements shall be included in the contract duration and shall not be justification for a delay claim by the Contractor. The time required for the Contractor to prepare, transmit and obtain approval of applicable submittals shall be included in the contract duration and shall not be justification for a delay claim by the Contractor. No work shall be started until after all required permits, licenses, and easements have been obtained. No work shall be started until all applicable submittals have been submitted and returned approved by the Owner's Representative. The Contractor shall notify the PSWID's project manager or engineer at least seventy-two (72) hours before the following events:

11.8.1. The start of construction in order to arrange for inspection.

11.8.2. Shutdown of PSWID water, drainage, and traffic control facility.

11.8.3. Shutdown of existing water wells, booster pumps, waterlines, and water tanks as well as other facilities associated with the PSWID public water system. All Shutdowns must have prior approval of the OWNER. Shutdown shall not exceed eight (8) hours for any installation. Only one facility may be shutdown at any time.

11.8.4. Coordination is required for all draining and filling of water facilities and all operations of existing valves or gauges with the project manager.

11.8.5. Start-up or testing of any water well or booster pump to be connected to any part of the existing PSWID water system. This includes operation of existing valves necessary to accommodate the work.

12. INDEMNIFICATION. To the fullest extent permitted by law, the Job Order Contractor, subcontractor or design professional shall indemnify and hold harmless the PSWID, and its officers and employees, from liabilities, damages, losses and costs, including reasonable attorney fees and court costs, but only to the extent caused by the negligence, recklessness or intentional wrongful conduct of such Job Order Contractor, subcontractor or design professional or other persons employed or used by such Job Order Contractor, subcontractor or design professional in the performance of the contract or subcontract. The amount and type of insurance coverage

requirements set forth herein will in no way be construed as limiting the scope of the indemnity in this paragraph.

13. DISPUTES.

13.1. Party Cooperation. The parties are fully committed to working with each other throughout the term of the Contract and agree to communicate regularly with each other at all times so as to avoid or minimize disputes or disagreements. If disputes or disagreements do arise, Job Order Contractor and Owner each commit to resolving such disputes or disagreements in an amicable, professional and expeditious manner so as to avoid unnecessary losses, delays and disruptions to the Work.

13.2. Field Level Resolution. Job Order Contractor and Owner will first attempt to resolve disputes or disagreements at the field level through discussions between the parties' representatives named herein.

13.3. Job Order Contractor Performance. The Job Order Contractor shall continue to perform the Work and Owner shall continue to satisfy its payment obligations to Job Order Contractor, pending the final resolution of any dispute or disagreements between the parties.

13.4. Partnering. If requested and mutually agreed upon, the Owner and Job Order Contractor will share in the expense of an initial facilitated partnering workshop, followed up by periodic refresher meetings at mutually agreed times. The goal of the workshop will be to identify common goals, common interests, lines of communication, and a commitment to cooperative problem solving.

13.5. Owner's Representative. Owner designates the individual listed below as its representative, which individual has the authority and responsibility for avoiding and resolving disputes under this Contract. (Identify individual's name, title, address and telephone numbers)

PSWID
Cato Esquivel, Jr., District Manager
6306 W. Hardscrabble
Pine, AZ 85544
(928) 476-4222

13.6. Job Order Contractor's Representative. Job Order Contractor designates the individual listed below as its representative, which individual has the authority and responsibility for avoiding and resolving disputes under this Contract. (Identify individual's name, title, address and telephone numbers)

_____
_____
_____
_____
_____
_____

13.7. Owner's Resolution. Any dispute which is not disposed of by agreement will be decided by the Owner, who will reduce its decision to writing and mail or otherwise furnish a copy thereof to the Job Order Contractor. Any dispute not finally resolved under this ***§ 13*** may be brought before the state courts of the State of Arizona and adjudicated in accordance with the laws of Arizona.

14. TERMINATION AND DEFAULT

14.1. Termination for Convenience. Owner may terminate performance of the Work under this Contract in whole or, from time to time, in part if Owner determines that termination is in Owner's interest. Owner shall effect such termination by delivering to Job Order Contractor a Notice of Termination specifying the extent of termination and the effective date.

14.2. Notice of Termination. After receipt of a Notice of Termination, and except as directed by Owner, Job Order Contractor shall immediately proceed with the following obligations, regardless of any delay in determining or adjusting any amounts due under this ***§ 14***:

14.2.1. Stop work as specified in the notice;

14.2.2. Place no further subcontracts or orders (referred to as subcontracts in this ***§ 14***) for materials, services or facilities, except as necessary to complete any Work not terminated;

14.2.3. Assign to Owner, if directed by Owner, all right, title, and interest of Job Order Contractor under the subcontracts to the extent they relate to the Work terminated, in which case Owner shall have the right to settle or to pay any termination settlement proposal arising out of those terminations, or with approval or ratification to the extent required by Owner, settle all outstanding liabilities and termination settlement proposals arising from the termination of subcontracts, the approval or ratification of which will be final for purposes of this ***§ 14***;

14.2.4. As directed by Owner, transfer title and deliver to Owner:

14.2.4.1. The fabricated or unfabricated parts, Work in progress, completed Work, supplies, and other material produced or acquired for the Work terminated;

14.2.4.2. The completed or partially completed plans, drawings, information, and other property that, if the Contract had been completed, would be required to be furnished to Owner;

14.2.5. Complete performance of the Work not terminated;

14.2.6. Take any action that may be necessary, or that Owner may direct, for the protection and preservation of the property related to this Contract that is in the possession of Job Order Contractor and in which Owner has or may acquire an interest; and

14.2.7. Use its best efforts to sell, as directed or authorized by Owner, any property of the types referred to in ***§ 14.2.3*** above; provided, however, that Job Order Contractor is not required to extend credit to any purchaser and may acquire the property under the conditions prescribed by, and at prices approved by, Owner. The proceeds of any transfer or disposition will be applied to reduce any payments to be made by Owner under the Contract, credited to the price or cost of the Work, or paid in any other manner directed by Owner.

14.3. Final Termination Settlement Proposal. After termination, Job Order Contractor shall submit a final termination settlement proposal to Owner in the form and with the certification prescribed by Owner. Job Order Contractor shall submit the proposal promptly, but no later than one year from the effective date of termination.

14.4. Owner Payment. Job Order Contractor and Owner may agree upon the whole or any part of the amount to be paid because of the termination. The amount will include a reasonable allowance for profit on work done. The Contract shall be amended, and Job Order Contractor paid the agreed amount.

14.4.1. If Job Order Contractor and Owner fail to agree on the whole amount to be paid Job Order Contractor because of the termination of work, Owner shall pay Job Order Contractor the amounts determined as follows, but without duplication of any amounts agreed upon under ***§ 14.4*** above:

14.4.1.1. For Work performed before the effective date of termination, the total (without duplication of any items) of:

14.4.1.1.1. The cost of this Work;

14.4.1.1.2. The cost of settling and paying termination settlement proposals under terminated subcontracts that are properly chargeable to the terminated portion of the Contract if not included in ***§ 14.4.1.1.1.*** above; and

14.4.1.1.3. A markup, including overhead and profit, on ***§ 14.4.1.1.1.*** above as is determined for pricing changes.

14.4.1.2. The reasonable costs of settlement of the Work terminated, including:

14.4.1.2.1. Accounting, legal, clerical, and other expenses reasonably necessary for the preparation of termination settlement proposals and supporting data;

14.4.1.2.2. The termination and settlement of subcontracts (excluding the amounts of such settlements); and

14.4.1.2.3. Storage, transportation, and other costs incurred, reasonably necessary for the preservation, protection, or disposition of the termination inventory.

14.5. <u>Destroyed, Lost, Stolen or Damaged Property</u>. Except for normal spoilage, and except to the extent that Owner expressly assumed the risk of loss, Owner shall exclude from the amounts payable to Job Order Contractor under Subparagraph 14.4.1 above, the fair value, as determined by Owner, of property that is destroyed, lost, stolen, or damaged so as to become undeliverable to Owner or to a buyer.

14.6. <u>Amount Due Job Order Contractor</u>. In arriving at the amount due Job Order Contractor under this ***§ 14***, there shall be deducted:

14.6.1. All unliquidated advances or other payments to Job Order Contractor under the terminated portion of the Job Order;

14.6.2. Any claim which Owner has against Job Order Contractor under the Contract; and

14.6.3. The agreed price for, or the proceeds of sale of, materials, supplies, or other things acquired by Job Order Contractor or sold under the provisions of this ***§ 14*** and not recovered by or credited to Owner.

14.7. <u>Partial Termination</u>. If the termination is partial, Job Order Contractor may file a proposal with Owner for an equitable adjustment of the price(s) of the continued portion of any Job Order. Any proposal by Job Order Contractor for an equitable adjustment under this ***§ 14*** shall be requested within ninety (90) calendar days from the effective date of termination unless extended in writing by Owner. Owner may, under the terms and conditions it prescribes, make partial payments and payments against costs incurred by Job Order Contractor of the terminated portion of any Job Order, if Owner believes the total of these payments will not exceed the amount to which Job Order Contractor will be entitled.

14.8. Excess Payments. If the total payments exceed the amount finally determined to be due, Job Order Contractor shall repay the excess to Owner upon demand.

14.9. Job Order Contractor Records. Unless otherwise provided in this Contract or by statute, Job Order Contractor shall maintain all records and documents relating to the terminated portion of this Contract for three (3) years after final settlement. This includes all books and other evidence bearing on Job Order Contractor's costs and expenses under this Contract. Job Order Contractor shall make these records and documents available to Owner, at Job Order Contractor's office, at all reasonable times, without cost. If approved by Owner, photographs, microphotographs, or other authentic reproductions may be maintained instead of original records and documents.

14.10. Default. If Job Order Contractor refuses or fails to prosecute the Work, or any separable part, with the diligence that will ensure its completion within the time specified in the Job Order including any extension, or fails to complete the Work within this time, Owner may terminate the Job Order Contractor's right to proceed with the Work (or separable part of the Work), upon thirty (30) days written notice to the Job Order Contractor. In this event, Owner may take over the Work and complete it by Contract or otherwise and may take possession of and use any materials, appliances, and plant on the site necessary for completing the Work.

14.11. Job Order Contractor's Right to Proceed. Job Order Contractor's right to proceed shall not be terminated under this ***§ 14***, if:

14.11.1. The delay in completing the Work arises from unforeseeable causes beyond the control and without the fault or negligence of Job Order Contractor. Examples of such causes include: acts of God or of the public enemy, acts of Owner in its Contractual capacity, acts of another contractor in the performance of a Contract with Owner, fires, floods, epidemics, quarantine restrictions, strikes, freight embargoes, unusually severe weather (The basis used to define normal weather will be data showing high and low temperatures, precipitation, and number of days of severe weather in the city closest to the site for the previous ten (10) years, as compiled by the United States Department of Commerce National Weather Service.), or delays of subcontractors or suppliers at any tier arising from unforeseeable causes beyond the control and without the fault or negligence of both Job Order Contractor and the subcontractors or suppliers; and

14.11.2. Job Order Contractor, within 30 calendar days from the beginning of any such delay (unless extended by Owner), notifies Owner in writing of the causes of delay. The Owner shall ascertain the facts and the extent of delay. If, in the judgment of Owner, the findings of fact warrant such action, the time for completing the Work shall be extended. The findings of Owner shall be final and conclusive on the parties, but subject to appeal and review under ***§ 13***.

14.12. Owner's Right to Terminate. The rights and remedies of Owner in this ***§ 14*** are in addition to any other rights and remedies provided by law or under this Contract.

14.13. Owner and Job Order Contractor Rights. If, after termination of Job Order Contractor's right to proceed, it is determined that Job Order Contractor was not in default, or that the delay was excusable, the rights and obligations of the parties will be the same as if the termination had been issued for the convenience of Owner.

14.14. Liquidated Damages. Liquidated Damages shall be in the sum per calendar day shown in Table 108-1, in MAG Specification, Section, 108.9 FAILURE TO COMPLETE ON TIME, per day for each calendar day of delay, based upon the total job order value to date (i.e.

phased project awards). If the contract is not terminated, the contractor shall continue performance and be liable to the Owner for the liquidated damages until the products are delivered or services performed. In the event the PSWID exercises its right of termination, the contractor shall be liable to the Owner for any excess costs, and in addition, for liquidated damages until such time the Owner may reasonably obtain delivery or performance of similar supplies or services.

14.15. Immigration Act. Contractor understands and acknowledges the applicability to Contractor of the Immigration Reform and Control Act of 1986 (IRCA). Contractor agrees to comply with the IRCA in performing under this contract and to permit PSWID inspection of personnel records to verify such compliance.

15. WARRANTY OF CONSTRUCTION

15.1. Applicable Warranties. In addition to any other warranties in any Job Orders, Job Order Contractor warrants, except as provided in ***§ 15.10***, that work performed conforms to the Job Order requirements and is free of any defect in equipment, material or design furnished, or workmanship performed by Job Order Contractor or any of its subcontractors or suppliers at any tier.

15.2. Warranty Duration. This warranty shall continue for a period of one (1) year from the date of final acceptance of the Work. If Owner takes possession of any part of the Work before final acceptance, this warranty shall continue for a period of one (1) year from the date possession is taken.

15.3. Job Order Contractor Corrective Work. Job Order Contractor shall remedy at Job Order Contractor's expense any failure of the Work to conform to the plans and specifications, or any construction defect. In addition, the Job Order Contractor shall remedy at Job Order Contractor's expense any damage to Owner's real or personal property, when that damage is the result of:

15.3.1. Job Order Contractor's failure to conform to requirements; or

15.3.2. Any defect of equipment, material, workmanship, or design furnished by the Job Order Contractor.

15.4. Job Order Contractor Restoration. Job Order Contractor shall restore any work damaged in fulfilling the terms and conditions of this ***§ 15***. Job Order Contractor's warranty with respect to work repaired or replaced will run for one (1) year from the date of repair or replacement.

15.5. Owner Notification. Owner shall notify Job Order Contractor, in writing, within a reasonable time after the discovery of any failure, defect, or damage.

15.6. Failure to Correct Work. If Job Order Contractor fails to remedy any failure, defect, or damage within ten (10) days after receipt of notice, Owner shall have the right to replace, repair, or otherwise remedy the failure, defect or damage at Job Order Contractor's expense.

15.7. Subcontractor and Supplier Warranties. With respect to all warranties, expressed or implied, from subcontractors, manufacturers, or suppliers for work performed and materials furnished for Job Orders issued under this Contract, Job Order Contractor shall:

15.7.1. Obtain all warranties required by the Job Order;

15.7.2. Require all warranties to be executed, in writing, for the benefit of Owner; and

15.7.3. Enforce all warranties for the benefit of Owner.

15.8. Owner Remedy. In the event Job Order Contractor's warranty under ***§ 15.2*** has expired, Owner may bring suit at its expense to enforce a subcontractor's, manufacturer's, or supplier's warranty.

15.9. Owner Furnished Material or Design. Unless a defect is caused by the negligence of Job Order Contractor or subcontractor or supplier at any tier, Job Order Contractor shall not be liable for the repair of any defects of material or design furnished by Owner or for the repair of any damage that results from any defect in Owner-furnished material or design.

15.10. Pre-Existing Work. Job Order Contractor is not responsible for and does not warranty pre-existing work or facilities that may be assigned to Job Order Contractor except as modified by the Job Order.

15.11. Owner's Rights. This warranty shall not limit Owner's rights under ***§ 8*** of this Contract with respect to latent defects, gross mistakes, or fraud.

16. STANDARD TERMS AND CONDITIONS

16.1. Contract Order of Precedence. In the event of an inconsistency between provisions of this Contract, the inconsistency shall be resolved by giving precedence in the following order:

16.1.1. Contract Modifications, if any;

16.1.2. This Contract, including Attachments;

16.1.3. Job Orders;

16.1.4. Drawings; and

16.1.5. Specifications.

16.2. Certification. By signature in the Offer section of the Offer and Contract Award page the Job Order Contractor certifies:

16.2.1. The submission of the offer did not involve collusion or other anti-competitive practices.

16.2.2. The Job Order Contractor shall not discriminate against any employee or applicant for employment.

16.2.3. The Job Order Contractor has not given, offered to give, nor intends to give at any time hereafter any economic opportunity, future employment, gift, loan, gratuity, special discount, trip favor, or service to a public servant in connection with the submitted offer. Failure to sign the offer, or signing it with a false statement, shall void the submitted offer or any resulting contracts, and the vendor may be debarred.

16.2.4. The Job Order Contractor is licensed to perform the Work pursuant to Arizona Revised Statutes Title 32, Chapter 10.

16.2.5. The Job Order Contractor does not participate in, and agrees not to participate in during the term of any resultant contract, a boycott of Israel in accordance with A.R.S. §35-393.01

16.3. Bribes and Kick-Backs. The Job Order Contractor shall not by any means:

16.3.1. Induce any person or entity employed in the construction of the Project to give up any part of the compensation to which that person or entity is entitled;

16.3.2. Confer on any governmental, public or quasi-public official having any authority or influence over the Project, any payment, loan subscription, advance, deposit of money, services or anything of value, present or promised;

16.3.3. Offer nor accept any bribes or kick-backs in connection with the Project from or to any individual or entity, including any of its trade contractors, subcontractors, consultants, suppliers or manufacturers of Project goods and materials; or,

16.3.4. Without the express written permission of the Owner, call for or by exclusion require or recommend the use of any subcontractor, consultant, product, material, equipment, system, process or procedure in which the Job Order Contractor has a direct or indirect proprietary or other pecuniary interest.

16.4. Applicable Law. In the performance of this agreement, contractors shall abide by and conform to any and all laws of the United States, State of Arizona and PSWID including but not limited to federal and state executive orders providing for equal employment and procurement opportunities, the Federal Occupational Safety and Health Act and any other federal or state laws applicable to this agreement.

Contractor specifically understands and acknowledges the applicability to it of the Americans with Disabilities Act, including Section 508, the Immigration Reform and Control Act of 1986, and the Drug Free Workplace Act of 1989. In addition, if this agreement pertains to construction, Contractor must also comply with A.R.S. § 34-301, as amended (Employment of Aliens on Public Works Prohibited) and A.R.S. § 34-302, as amended (Residence Requirements for Employees).

Under the provisions of A.R.S. § 41-4401, Contractor hereby warrants to the PSWID that Contractor and each of its subcontractors ("Subcontractors") will comply with, and are contractually obligated to comply with, all Federal immigration laws and regulations that relate to their employees and A.R.S. § 23-214(A) (hereinafter, "Contractor Immigration Warranty").

A breach of the Contractor Immigration Warranty shall constitute a material breach of this agreement and shall subject Contractor to penalties up to and including termination of this agreement at the sole discretion of the PSWID. The PSWID may, at its sole discretion, conduct random verification of the employment records of Contractor and any Subcontractors to ensure compliance with the Contractor Immigration Warranty. Contractor agrees to assist the PSWID regarding any random verifications performed.

Neither Contractor nor any Subcontractor shall be deemed to have materially breached the Contractor Immigration Warranty if Contractor or the Subcontractor establishes that it has complied with the employment verification provisions prescribed by §§ 274A and 274B of the Federal Immigration and Nationality Act and the E-Verify requirements prescribed by A.R.S. §23-214(A).

The provisions of this Paragraph must be included in any contract Contractor enters into with any Subcontractors who provide services under this agreement or any subcontract. "Services" is defined as furnishing labor, time or effort in the State of Arizona by a contractor or subcontractor. Services include construction or maintenance of any structure, building or transportation facility or improvement to real property.

Contractor warrants, for the term of this agreement and for six months thereafter, that is has fully complied with the requirements of the Immigration Reform and Control Act of 1986 and all related or similar legal authorities.

This contract shall be governed by the PSWID and Contractor shall have all remedies afforded each by the Uniform Commercial Code, as adopted in the State of Arizona, except as otherwise provided in this contract or in statutes pertaining specifically to the PSWID. This contract shall be governed by the laws of the State of Arizona and suit pertaining to this contract may be brought only in courts in the State of Arizona.

This contract is subject to the provisions of ARS §38-511; the PSWID may cancel this contract without penalty or further obligations by the PSWID or any of its departments or agencies if any person significantly involved in initiating, negotiating, securing, drafting or creating the contract on behalf of the PSWID or any of its departments or agencies, is at any time while the contract or any extension of the contract is in effect, an employee of any other party to the contract in any capacity or a consultant to any other party of the contract with respect to the subject matter of the contract..

16.4.1. Job Order Contractor warrants, for the term of this agreement and for six months thereafter, that is has fully complied with the requirements of the Immigration Reform and Control Act of 1986 and all related or similar legal authorities.

16.4.2. This contract shall be governed by the Owner. PSWID and Job Order Contractor shall have all remedies afforded each by the Uniform Commercial Code, as adopted in the State of Arizona, except as otherwise provided in this contract or in statutes pertaining specifically to the Owner. This contract shall be governed by the laws of the State of Arizona. Any lawsuit pertaining to this contract may be brought only in courts in the State of Arizona.

16.4.3. This contract is subject to the provisions of ARS § 38-511; the Owner may cancel this contract without penalty or further obligations by the Owner or any of its departments or agencies if any person significantly involved in initiating, negotiating, securing, drafting or creating the contract on behalf of the Owner or any of its departments or agencies, is at any time while the contract or any extension of the contract is in effect, an employee of any other party to the contract in any capacity or a consultant to any other party of the contract with respect to the subject matter of the contract.

16.5. Legal Remedies.: All claims and controversies shall be subject to resolution according to the terms of the PSWID Procurement Code.

16.6. Contract: The contract between the Owner and the Job Order Contractor shall consist of (1) the Solicitation, including instructions, all terms and conditions, specifications, scopes of work, attachments, price sheet(s) and any amendments thereto, and (2) the offer submitted by the Job Order Contractor in response to the solicitation. In the event of a conflict in language between the Solicitation and the Offer, the provisions and requirements in the Solicitation shall govern. However, the Owner reserves the right to clarify, in writing, any contractual terms with the concurrence of the Job Order Contractor, and such written contract shall govern in case of conflict with the applicable requirements stated in the Solicitation or the Vendor's offer. The Solicitation shall govern in all other matters not affected by the written contract.

16.7. Contract Amendments: This contract may be modified only by a written Contract Amendment signed by persons duly authorized to enter into contracts on behalf of the Owner and the Job Order Contractor.

16.8. Contract Applicability: The Offeror shall substantially conform to the terms, conditions, specifications and other requirements found within the text of this Solicitation. All previous agreements, contracts, or other documents, which have been executed between the Offeror and the Owner are not applicable to this Solicitation or any resultant contract.

16.9. Severability. The provisions of this contract are severable to the extent that any provision or application held to be invalid shall not affect any other provision or application of the contract which may remain in effect without the invalid provision or application.

16.10. Relationship to Parties. It is clearly understood that each party will act in its individual capacity and not as an agent, employee, partner, joint venture, or associate of the other. An employee or agent of one party shall not be deemed or construed to be the employee or agent of the other for any purpose whatsoever. The Job Order Contractor is advised that taxes or Social Security payments will not be withheld from any PSWID payments issued hereunder and that the Job Order Contractor should make arrangements to directly pay such expenses, if any.

16.11. No Delegation or Assignment. - Contractor shall not delegate any duty under this Contract, and no right or interest in this Contract shall be assigned by Contractor to any successor entity or third party, including but not limited to an affiliated successor or purchaser of Contractor or its assets, without prior written permission of the PSWID. The PSWID, at its option, may cancel this Contract in the event Contractor undertakes a delegation or assignment without first obtaining the PSWID's written approval. Contractor agrees and acknowledges that it would not be unreasonable for the PSWID to decline to approve a delegation or assignment that results in a material change to the services provided under this Contract or an increased cost to the PSWID.

16.12. Job Order Contractor/Supplier Contract. The Job Order Contractor shall enter into written contracts with its subcontractor(s) and supplier(s), if any, and those written contracts shall be consistent with this Contract for Construction. It is the intent of the Owner and the Job Order Contractor that the obligations of the Job Order Contractor's subcontractor(s) and supplier(s), if any, inure to the benefit of the Owner and the Job Order Contractor, and that the Owner be a third-party beneficiary of the Job Order Contractor's agreements with its subcontractor(s) and supplier(s).

16.12.1. The Job Order Contractor shall make available to each subcontractor and supplier, if any, prior to the execution of written contracts with any of them, a copy of the pertinent portions of this Contract for Construction, including those portions of the Construction documents to which the subcontractor or supplier will be bound, and shall require that each subcontractor and supplier shall similarly make copies of applicable parts of such documents available to its respective subcontractor(s) and supplier(s).

16.12.2. The Job Order Contractor shall engage each of its subcontractor(s) and supplier(s) with written contracts which preserve and protect the rights of the Owner and include the acknowledgment and agreement of each subcontractor or supplier that the Owner is a third-party beneficiary of the contract. The Job Order Contractor's agreements with its subcontractor(s) and supplier(s) shall require that in the event of default under, or termination of, this Contract for Construction, and upon request of the Owner, the Job Order Contractor's subcontractor(s) and supplier(s) will perform services for the Owner.

16.12.3. The Job Order Contractor shall include in its agreements with its subcontractor(s) and supplier(s) a provision which contains the acknowledgment and agreement of the subcontractor or supplier that it has received and reviewed the applicable terms, conditions and

requirements of this Contract for Construction that are included by reference in its written contract with the Job Order Contractor, and that it will abide by those terms, conditions and requirements.

16.13. Rights and Remedies. No provision in this document or in the vendor's offer shall be construed, expressly or by implication, as waiver by the Owner of any existing or future right and/or remedy available by law in the event of any claim of default or breach of contract. The failure of the Owner to insist upon the strict performance of any term or condition of the contract or to exercise or delay the exercise of any right or remedy provided in the contract, or by law, or the Owner's acceptance of and payment for materials or services, shall not release the Job Order Contractor from any responsibilities or obligations imposed by this contract or by law, and shall not be deemed a waiver of any right of the Owner to insist upon the strict performance of the Contract.

16.14. Overcharges By Antitrust Violations. The Owner maintains that, in practice, overcharges resulting from antitrust violations are borne by the purchaser. Therefore, to the extent permitted by law, the Job Order Contractor hereby assigns to the Owner any and all claims for such overcharges as to the goods and services used to fulfill the Contract.

16.15. Force Majeure. Except for payment for sums due, neither party shall be liable to the other nor deemed in default under this Contract if and to the extent that such party's performance of this Contract is prevented by reason of force Majeure.

16.15.1. The term *"force majeure"* means an occurrence that is beyond the control of the party affected and occurs without its fault or negligence. Without limiting the foregoing, force majeure includes acts of God: acts of the public enemy; war; riots; strikes; mobilization; labor disputes; civil disorders; fire; floods; lockouts, injunctions-intervention-acts, or failures or refusals to act by government authority; and other similar occurrences beyond the control of the party declaring force majeure which such party is unable to prevent by exercising reasonable diligence. The force majeure shall be deemed to commence when the party declaring force majeure notifies the other party of the existence of the force majeure and shall be deemed to continue as long as the results or effects of the force majeure prevent the party from resuming performance in accordance with this Contract.

16.15.2. Force majeure shall not include the following occurrences: late delivery of equipment or materials caused by congestion at a manufacturer's plant or elsewhere, an oversold condition of the market, inefficiencies, or similar occurrences; late performance by a subcontractor unless the delay arises out of a force majeure occurrence in accordance with this Force Majeure term and Condition; or any delay or failure in performance by either party hereto shall not constitute default hereunder or give rise to any claim for damages or loss of anticipated profits if, and to the extent that such delay or failure is caused by force majeure. If either party is delayed at any time in the progress of the work by force majeure, then the delayed party shall notify the other party in writing of such delay within forty-eight (48) hours commencement thereof and shall specify the causes of such delay in such notice. Such notice shall be hand delivered or mailed *Certified-Return Receipt* and shall make a specific reference to this article, thereby invoking its provisions. The delayed party shall cause such delay to cease as soon as practicable and shall notify the other party in writing. The time of completion shall be extended by contract modification for a period of time equal to the time that the results or effects of such delay prevent the delayed party from performing in accordance with this contract.

16.16. Right To Assurance. Whenever one party to this contract in good faith has reason to question the other party's intent to perform he may demand that the other party give a written

assurance of this intent to perform. In the event that a demand is made and no written assurance is given within five (5) days, the demanding party may treat this failure as an anticipatory repudiation of the Contract.

16.17. Right To Audit Records. The PSWID may, at reasonable times and places, audit the books and records of any Contractor as related to any contract held with the PSWID. This right to audit also empowers the PSWID to inspect the papers of any Contractor or Subcontractor employee who works on this contract to ensure that the Contractor or Subcontractor is complying with the Contractor Immigration Warranty made pursuant to Paragraph 16.4 above.

16.18. Warranties. Job Order Contractor warrants that all material, service or construction delivered under this contract shall conform to the specifications of this contract. Unless otherwise stated in Job Order Contractor's response, the Owner is responsible for selecting items, their use, and the results obtained from any other items used with the items furnished under this contract. Mere receipt of shipment of the material/service specified and any inspection incidental thereto by the Owner shall not alter or affect the obligations of the Job Order Contractor or the rights of the Owner under the foregoing warranties. Additional warranty requirements may be set forth in the solicitation.

16.19. Inspection. All material and/or services are subject to inspection and acceptance by the Owner. Materials and/or services failing to conform to the specifications of this Contract will be held at Job Order Contractor's risk and may be returned to the Job Order Contractor. If so returned, all costs are the responsibility of the Job Order Contractor. The Owner may elect to do any or all of the following:

16.19.1. Waive the non-conformance.

16.19.2. Stop the work immediately.

16.19.3. Bring material into compliance.

16.19.4. This shall be accomplished by a written determination from the Owner.

16.20. Title and Risk of Loss. The title and risk of loss of material and/or service shall not pass to the Owner until the Owner actually receives the material or service at the point of delivery, unless otherwise provided within this Contract.

16.21. No Replacement of Defective Tender. Every tender of materials shall fully comply with all provisions of the Contract. If a tender is made which does not fully conform, this shall constitute a breach of the Contract as a whole.

16.22. Shipment Under Reservation Prohibited. Job Order Contractor is not authorized to ship materials under reservation and no tender of a bill of lading will operate as a tender of the materials.

16.23. Liens. All materials, service or construction shall be free of all liens, and if the Owner requests, a formal release of all liens shall be delivered to the Owner.

16.24. Licenses. shall maintain in current status, all Federal, State and Local licenses and created under this contract are the property of the Owner and shall not be used or released by the Job Order Contractor or any other person except with the prior written permission of the Owner.

16.25. Patents and Copyrights. All services, information, computer program elements, reports and other deliverables, which may be patented or copyrighted and created under this contract

are the property of the Owner and shall not be used or released by the Job Order Contractor or any other person except with the prior written permission of the Owner.

16.26. Cost of Bid/Proposal Preparation. The Owner shall not reimburse the cost of developing presenting or providing any response to this solicitation. Offers submitted for consideration should be prepared simply and economically, providing adequate information in a straightforward and concise manner.

16.27. Public Records. All offers submitted in response to this solicitation shall become the property of the PSWID and shall become a matter of public record available for review, subsequent to the award notification, in accordance with the PSWID's Procurement Code. However, subsequent to the award of the contract, any information and documents obtained by the PSWID during the course of an audit conducted in accordance with Paragraph 16.17 above for the purpose of determining compliance by Contractor or a Subcontractor with the Contractor Immigration Warranty mandated by Paragraph 16.4 above shall remain confidential and shall not be made available for public review or produced in response to a public records request, unless the PSWID is ordered or otherwise directed to do so by a court of competent jurisdiction.

16.28. Advertising. Job Order Contractor shall not advertise or publish information concerning this Contract, without prior written consent of the Owner.

16.29. Delivery Orders. The Owner shall issue a Purchase Order for the material and/or services covered by this contract. All such documents shall reference the contract number as indicated on the signature page of the contract

16.30. Funding. Any contract entered into by the PSWID is subject to funding availability. Fiscal years for the PSWID are July 1 to June 30. The Owner Council approves all budget requests. If a specific funding request is not approved, the contract shall be terminated.

16.31. Federal Funding. It is the responsibility of the Contractor to determine on any single job order project if federal wage rates will apply. It is also the responsibility of the Contractor to incorporate any necessary amounts in the bid to accommodate for required federal record keeping and necessary pay structures. The Contractor should contact the PSWID regarding any applicable Davis Bacon wage rates.

16.31.1 Davis-Bacon Act - (40 U.S.C. §276a-276a-5). All contracts or subsequent subcontracts for construction, alteration, renovation, or repair, including painting and decorating, of a public building or public work, or building or work, financed by federal funds which meets the $2,000 threshold are required to pay the federal prevailing wage rate for each class of laborer or mechanic employed. Regulations applicable to grant-enabling statutes incorporating the Act can be found in 29 Code of Federal Regulations (CFR), Parts 1,3,5 and 7. These regulations stipulate that grant funds appropriated under statutes imposing the Davis-Bacon Act requirements shall not be paid to a grantee (the Department) until contractors or subcontractors performing work under the grant certify that they will comply with the Act's requirements. The Act also applies to any contract or subcontract for similar work on public grants from a federal agency, or where the federal government acts as guarantors of mortgages. The only exception is for the transportation of materials and supplies by persons who are not employed directly at the work site, but are employed solely to make deliveries to the work site.

Provider Agencies must ensure that contracts or subcontracts for any construction/alteration projects contain the wage determinations issued and that the appropriate clauses required by the Davis-Bacon regulations (29 CFR, section 5.5) are present. It should be made clear in any

announcements of projects or RFPs that federal grant funds are being used and that Davis-Bacon will apply even if the federal government is not a party to the contract or subcontract. The prevailing wage must be paid regardless of any contractual relationship that may exist between a contractor or a subcontractor. Although the Department is not responsible to review sub-contracts for compliance, it has the right to require a prevailing wage.

Sanctions for post-certification violations include suspension of payment, advances, or guarantees of grant funds, and the forced restitution of wages that should have been paid and the removal of offending contractors or subcontractors from active employment lists.

Failure to comply can bring penalties that can be severe. The contractor or subcontractor and their sureties are liable for any excess costs for completing the work; the Department may withhold accruals to ensure payment of prevailing wages to the workers; the contract or subcontract may be terminated and/or the contractor or subcontractor may be debarred for a period of three years.

16.32. A.R.S. Title 34 Provisions.

16.32.1. The maximum dollar amount of an individual job order shall be Three Million Dollars ($3,000,000) or such higher or lower amount prescribed by the Owner in an action notice pursuant to A.R.S. title 38, chapter 3, article 3.1 or a rule adopted by the Owner as the maximum amount of an individual job order. Requirements shall not be artificially divided or fragmented in order to constitute a job order that satisfies this requirement.

16.32.2. If the Job Order Contractor subcontracts or intends to subcontract part or all of the work under a job order and if this contract includes descriptions of standard individual tasks, standard unit prices for standard individual tasks and pricing of job orders based on the number of units of standard individual tasks in the job order, then:

16.32.2.1. The Job Order Contractor has a duty to deliver promptly to each subcontractor invited to bid a coefficient to the Job Order Contractor to do all or part of the work under one or more job orders:

16.32.2.1.1. A copy of the descriptions of all standard individual tasks on which the subcontractor is invited to bid.

16.32.2.1.2. A copy of the standard unit prices for the individual tasks on which the subcontractor is invited to bid.

16.32.2.2. If not previously delivered to the subcontractor, the Job Order Contractor has a duty to deliver promptly the following to each subcontractor invited to or that has agreed to do any of the work included in any job order:

16.32.2.2.1. A copy of the description of each standard individual task that is included in the job order and that the subcontractor is invited to perform.

16.32.2.2.2. The number of units of each standard individual task that is included in the job order and that the subcontractor is invited to perform.

16.32.2.2.3. The standard unit price for each standard individual task that is included in the job order and that the subcontractor is invited to perform.

16.32.3. The Owner will include the full street or physical address of each separate location at which the construction will be performed for each individual Job Order. The Job Order Contractor (and on behalf of each subcontractor at any level) hereby agrees to include in each of

its subcontracts the same address information. The Job Order Contractor and each subcontractor at any level shall include in each subcontract the full street or physical address of each separate location at which construction work will be performed.

16.33 Prohibited Lobbying Activities. The Offeror, his/her agent or representative shall not contact, orally or in any written form any PSWID elected official or any PSWD employee other than the PSWID District Manager or PSWID Attorney's office (for legal issues only) regarding the contents of this solicitation or the solicitation process commencing from receipt of a copy of this request for proposals and ending upon submission of a staff report for placement on a PSWID Board agenda. The PSWID District Manager shall disqualify an Offeror's proposal for violation of this provision. This provision shall not prohibit an Offeror from petitioning an elected official after submission of a staff report for placement on a PSWID Board agenda or engaging in any other protected first amendment activity after submission of a staff report for placement on a PSWID Board agenda.

16.34 Prohibited Political Contributions. Consultant during the term of this Agreement shall not make a contribution reportable under Title 16, Chapter 6, Article 1, Arizona Revised Statutes to a candidate or candidate committee for any PSWID elective office during the term of this Agreement. The PSWID reserves the right to terminate the Agreement without penalty for any violation of this provision.

ATTACHMENTS

Attachment A	JOC General Scope of Services
Attachment B	RSOQ & Contractor's Response
Attachment C	JOC Cost Proposal Forms (Pricing Matrix, Project Cost Sheet)
Attachment D	Contractor's Contacts (Contact List & Authorized Signature Form)

ATTACHMENT A
JOC General Scope of Services

1.0 GENERAL INFORMATION

1.1 This is a fixed price, indefinite quantity type Contract for the performance of various [identify the type of projects permitted under this JOC (needs to align with scope of work outlined in original RSOQ)] on an as-needed basis as may be required by Owner. The specific work requirements will be identified in Job Orders to be issued by Owner.

1.2 Depending on what is required by the Individual Job Order Agreement, the type of Contract will be either "Lump Sum Fixed Price" or "Guaranteed Maximum Price (with savings returned to owner)".

2.0 DOCUMENTS

2.1 The currently applicable pricing structure contains pricing information for the Work to be accomplished in the pricing matrix specified. The Pricing matrix can only be updated at time of yearly contract renewal by mutually agreeable change order. Previously issued Job Orders and changes will not be retroactively re-priced although any changes priced after receipt of an update will be priced by the updated version of the new pricing matrix.

2.2 The construction specifications in effect at Contract signing, and provided to the Job Order Contractor, shall be the specifications under this Contract.

3.0 WORK AUTHORIZATION

Any Work required under this Contract shall be authorized by issuance of formal, written Job Orders, as follows:

3.1 As the need exists (as determined by Owner) for performance under the terms of this Contract, Owner will notify Job Order Contractor of an existing requirement.

3.2 Upon the receipt of this notification, Job Order Contractor shall respond within two (2) working days, or as otherwise agreed, by:

3.2.1 Visiting the proposed site in the company of Owner, or;

3.2.2 Establishing contact with Owner to further define the scope of the requirement.

3.3 After mutual agreement on the scope of the individual requirement, Job Order Contractor shall then prepare a proposal for accomplishment of the task unless Job Order Contractor, in its sole discretion, elects not to undertake the Work. If the Work is declined, Job Order Contractor will so notify Owner in a timely manner.

3.4 The price matrix shall serve as the basis for establishing the value of the Work to be performed.

3.5 Job Order Contractor's proposal shall be submitted within ten (10) working days unless otherwise agreed.

3.6 Upon receipt of Job Order Contractor's proposal, Owner will review the proposal for completeness and will reach agreement with Job Order Contractor on pricing, schedule, and all other terms, prior to issuance of a Job Order.

3.7 In the event Owner does not issue a Job Order after receipt of Job Order Contractor's proposal, Owner is not obligated to reimburse Job Order Contractor for any costs incurred in the preparation of the proposal, except as noted in ***§ 4.3.***

4.0 SCHEDULING OF WORK

4.1 For each Job Order, Owner will issue a Notice to Proceed. The first day of performance under a Job Order shall be the effective date specified in the Notice to Proceed. Any preliminary work started or material ordered or purchased before receipt of the Notice to Proceed shall be at the risk and expense of Job Order Contractor. Job Order Contractor shall diligently prosecute the Work to completion within the time set forth in the Job Order. The period of performance includes allowance for mobilization, holidays, weekend days, normal inclement weather, and cleanup. Therefore, claims for delay based on these elements will not be allowed. When Job Order Contractor considers the Work complete and ready for its intended use, Job Order Contractor shall request Owner to inspect the Work to determine the status of completion. When Owner determines the Work to be Punch List Prepared as defined in Article 1, Owner will provide Contractor with a list of items to be completed or corrected prior to final payment for the Job Order. Job Order Contractor shall proceed promptly to complete and correct items on the list.

4.2 Job placement of materials and equipment shall be made with a minimum of interference to Owner operations and personnel.

4.3 Furniture and portable office equipment in the immediate work area will be moved by Job Order Contractor and replaced to its original location. If the furniture and portable office equipment cannot be replaced to its original location, Owner will designate new locations. If furniture and portable office equipment (or other items) must be moved and/or stored outside the immediate area, Owner will compensate Job Order Contractor for any such transportation and storage costs incurred.

4.4 Job Order Contractor shall take all precautions to ensure that no damage will result from its operations to private or public property. All damages shall be repaired or replaced by Job Order Contractor at no cost to Owner.

4.5 Job Order Contractor shall be responsible for providing all necessary traffic control, such as street blockages, traffic cones, flagmen, etc., as required for each Job Order. Proposed traffic control methods shall be submitted to Owner for approval.

5.0 QUALITY ASSURANCE/QUALITY CONTROL PROGRAM

5.1 Job Order Contractor shall submit, for Owner approval, a Quality Assurance/Quality Control Plan within fifteen (15) calendar days after issuance of the initial Job Order. This plan should address all aspects of quality control including responsibility for surveillance of work, documentation, trend analysis, corrective action and interface with Owner's inspectors.

6.0 DESIGN

6.1 In accordance with the provisions of ARS § 34-602 & 603, the PSWID may require the Job Order Contractor to contract with one or more Design Professionals to provide architectural or engineering design of the Project.

6.2 As an alternative to ***§ 6.1***, and in accordance with the provisions of ARS § 34-602 & 603, the PSWID may elect to contract separately with one or more Design Professionals to provide architectural or engineering design of the Project.

6.3 Whether the PSWID or the Job Order contractor contracts with the Design Professional, it is expected that some or all the following services will be provided during the performance of the work:

6.3.1 The Design Professional will provide administration of the work. The PSWID and the Contractor will endeavor to communicate through the Design Professional. Communications by and with the Design Professionals' consultants will be through the Design Professional.

6.3.2 The Design Professional will visit the Site at intervals appropriate to the stage of construction to become generally familiar with the progress and quality of the completed work and to determine in general if the work is being performed in accordance with the contract documents. The Design Professional will keep the PSWID informed of progress of the work and will endeavor to guard the PSWID against defects and deficiencies in the work.

6.3.3 Upon the Job Order Contractor's submittals, the Design professional will review and approve or take other appropriate action on submittals as Shop Drawings, Product Data, and Samples.

6.3.4 All drawings produced for projects under this contract are the property of the PSWID and are owned in whole by the PSWID for any and all future use and considerations.

7.0 PROJECT AS-BUILTS

7.1 An individual Job Order's scale, complexity, and proximity to agency rights-of-way will determine the specific as-built requirements for each individual job order project. Unless otherwise determined at the time of the job order award that project as-builts will not be required, the Job Order Contractor shall assume that they must satisfy the as-built requirements of both the PSWID as the permitting agency and the PSWID as the project owner. For Job Orders near rivers and streams, additional as-built requirements may by imposed.

7.2 To satisfy the requirements of the PSWID as the permitting agency, the Job Order Contractor shall retain the services of an Arizona Registered Land Surveyor to as-built the constructed condition of all grading, drainage, hardscape, and underground utility civil improvements. The Job Order Contractor will be required to meet the requirements of Chapter 7 of the PSWID Infrastructure Development Design Guidelines and shall make the required submissions to the permitting agency sufficiently in advance of Final Completion.

7.3 To satisfy the requirements of the PSWID as the OWNER, the Job Order Contractor shall prepare industry standard redline as-built/record drawings on a clean print of the construction documents or relevant shop drawing. The Job Order Contractor shall neatly mark and post to these drawings any clarification or scope changing documents issued by the design professional and shall neatly mark the drawings to indicate variances from the designed condition. The Job

Order Contractor shall submit the as-built documents to the job order project manager for review, correction, and approval sufficiently in advance of Final Completion.

8.0 UTILITY COMPANY COORDINATION

8.1 Unless specifically excluded by the Individual Job Order Agreement, the Job Order Contractor will be responsible for coordinating with utility design work for permanent service to the project and will ensure that the work takes place in a timely manner and does not impact the project schedule. Any utility design fees for permanent services to a project will be paid by the PIWD.

9.0 TEMPORARY SANITATION FACILITIES

9.1 The Contractor shall provide ample toilet facilities with proper enclosures for the use of workmen employed on the work site. Toilet facilities shall be installed and maintained in conformity with all applicable state and local laws, codes, regulations and ordinances. They shall be properly lit and ventilated, and kept clean at all times.

9.2 Adequate and satisfactory drinking water shall be provided at all times and under no circumstances and under no conditions will the use of common cups be permitted. The Contractor must supply sanitary drinking cups for the benefit of all employees.

10.0 DUST CONTROL AND WATER

10.1 The dust control measures shall be in accordance with industry standards and local and State requirements as well as community standards with reasonable accommodations to the public. Water or other approved dust palliative in sufficient quantities shall be applied during all phases of construction involving open earthwork to prevent unnecessary discharge of dust and dirt into the air. The Contractor shall be responsible for compliance with these regulations. A Notice to Proceed will not be issued until the PSWID has received a copy of the Contractor's Dust Control Plan and Permit if applicable.

10.2 The Contractor shall keep suitable equipment on hand at the job site for maintaining dust control on the project streets, and shall employ sufficient labor, materials and equipment for that purpose at all times during the project to the satisfaction of the PSWID Engineer.

10.3 Watering shall conform to the provisions of Section 225 of the MAG Standard Specifications. The cost of watering will be included in the price bid for the construction operation to which such watering is incidental or appurtenant.

10.4 Installation and removal of fire hydrant meters should be scheduled at least forty-eight (48) hours in advance through the PSWID. A $1,000 deposit is required for each meter. An additional $28.00 service fee is also required. The cost of the water is at the prevailing rate.

11.0 ELECTRICITY

11.1 If available the Owner may furnish to Job Order Contractor from existing Owner facilities. It is the responsibility of Job Order Contractor to determine the extent to which existing Owner electrical facilities are adequate for the needs of this Contract.

11.2 Upon completion of this Contract the removal of all taps, connections and accessories will be accomplished by and at the expense of Job Order Contractor, and costs included in the Job

Order Proposal, so as to leave the electrical power source and facility in its original condition. Such removal shall also be subject to the approval of Owner.

12.0 WORK BY OWNER

Owner reserves the right to undertake work and/or award Contracts for the performance of the same or similar type work contemplated herein, and to do so will not breach or otherwise violate the Contract.

ATTACHMENT B

RSOQ & Contractor's Response

(See Attached)

ATTACHMENT C

JOC Cost Proposal Forms
(Pricing Matrix & Project Cost Sheet)

(See Attached)

ATTACHMENT D

Contractor's Contacts
(Contact List & Authorized Signature Form)

(See Attached)

Order Proposal, so as to leave the electrical power source and facility in its original condition. Such removal shall also be subject to the approval of Owner.

12.0 WORK BY OWNER

Owner reserves the right to undertake work and/or award Contracts for the performance of the same or similar type work contemplated herein, and to do so will not breach or otherwise violate the Contract.

APACHE UNDERGROUND & EXCAVATION
P.O. BOX 134
LAKESIDE, ARIZONA, 85929

Mark Gardner
By: Mark Gardner

Title: Owner

10/18/18
Date:

PINE-STRAWBERRY WATER IMPROVEMENT DISTRICT
6306 WEST HARDSCRABBLE ROAD
PINE, ARIZONA, 85544

By: Robert Arbuthnot

Title: Chairman

10/18/18
Date:

Sharon Hillman
Attested To:

TREASURER
BY:

10/18/18
Date:

EXHIBIT F

TOWN OF FLORENCE, ARIZONA
CONTRACT FOR COOPERATIVE USE OF PINE-STRAWBERRY WATER IMPROVEMENT DISTRICT (PSWID) SOLICITATION AND CONTRACT FOR WATERLINE REPLACEMENT AND WATER FACILITIES IMPROVEMENT PROJECT CONSTRUCTION WORK / JOB ORDER CONTRACTING

THIS CONTRACT (the "Contract") is made and entered into effective as of the 1 st day of April, 2019 ("Effective Date"), by and between the Town of Florence, Arizona (the "Town"), and Apache Underground and Excavating LLC. (the "Contractor") and together with the Contract Documents referred to and incorporated herein, is the "resultant contract" contemplated with the Pine-Strawberry Water Improvement District (PSWID)for Waterline Replacement and Water Facilities Improvement Project Construction Work Job Order Contracting. The Town and the Contractor are sometimes referred to in this Contract collectively as the "Parties" and each individually as a "Party".

1. **SCOPE OF WORK**: The Contractor shall provide the Town the materials and services described in the attached scope of materials and services set forth in **Exhibit "A"** ("Services"). The Contractor shall provide the Services in accordance with the schedule attached in **Exhibit "A**", and the Contract Documents, including all exhibits to the Master Contract including but not limited to any Standard Terms and Conditions and Detailed Specifications. Contractor agrees, at its own cost and expense, to do all of the work and furnish all of the equipment, personnel and materials necessary to provide, in a good and substantial manner and to the satisfaction of the Town, the Services.

2. **PRIORITY OF DOCUMENTS**. It is further expressly agreed by and between the parties that should there be any conflict between the terms of this Contract and the Contractor's Proposal, then this Contract and the provisions of the Contract Documents shall control and nothing herein shall be considered as an acceptance of the terms of the said Proposal conflicting herewith or the Master Contract, unless expressly stated herein.

3. **INCORPORATION**: For and in consideration of this Contract and other good and valuable consideration, the Contractor agrees that the master Job Order Contract by the Pine-Strawberry Water Improvement District (PSWID) for Waterline Replacement and Water Facilities Improvement Project Construction Work Job Order Contracting, dated October 18, 2018 and Job Order Contract Between PSWID and Apache Underground and Excavating LLC is in full force and effect, and all terms and conditions of the Master Contract are incorporated by reference into this Contract, creating an agreement identical in terms between the Town and Contractor. In the Master Contract, the terms: "PSWID", "Pine-Strawberry Water Improvement District", shall be deemed to be and refer to the Town of Florence; the terms: "Maricopa County", shall be deemed to be and refer to Pinal County; the terms: "Manager of Construction and Contracting", shall be

deemed to be and refer to the Florence Public Works Director, Town of Florence, 425 E. Ruggles Street, Florence, AZ 85132; and the terms: "Respondent", or "Contractor," or "Job Order Contractor", or "Apache Underground and Excavating LLC" shall be deemed to be and refer to the Contractor under this Contract.

4. **CONTRACT DOCUMENTS**: This Contract consists of the following contract documents, which by reference are incorporated herein:
   A. This signed Contract page 40.
   B. The solicitation Documents for the PSWID Solicitation and Contract for Waterline Replacement and Water Facilities Improvement Project Construction Work Job Order Contract, dated October 18, 2018 between the Pine-Strawberry Water Improvement District and Apache Underground and Excavating LLC., including, but not limited to: Instructions, Fee Schedules; Notices; Checklists; Requirements for Proposers; General Conditions; Special Conditions; Scope of Work; Work Schedule; Certificates of Compliance; Warranties for Work; Work Forms; Attachments; Price Sheets; Questionnaires; Response Forms; Specifications and Pricing Sheets; Special Provisions and Specifications; Technical Provisions and Specifications; Schedules; Cooperative Authorizations; Exhibits; (the "Contract Documents" or "Master Contract").

5. **CONTRACT PRICING**: Contract pricing shall be consistent with the Contract Documents and Contractor's Proposal and is listed in **Exhibit "A"** (Price Sheet), and shall not exceed **$939,128.00**.

6. **TERM OF CONTRACT**: The term of this Contract shall be from the Effective Date through satisfactory completion of the Services or delivery of Goods and acceptance of the Services and/or Goods by the Town. Time is of the essence to the terms of this Contract.

7. **COMPLIANCE WITH FEDERAL AND STATE LAWS**.
   A. The Contractor understands and acknowledges the applicability to it of the American with Disabilities Act, the Immigration Reform and Control Act of 1986 and the Drug Free Workplace Act of 1989.

   B. Under the provisions of A. R. S. § 41-4401, Contractor hereby warrants to the Town that the Contractor and each of its subcontractors will comply with, and are contractually obligated to comply with, all Federal Immigration laws and regulations that relate to their employees and A. R. S. § 23-214 (A) (hereinafter "Contractor Immigration Warranty").

   C. A breach of the Contractor Immigration Warranty shall constitute a material breach of this Contract and shall subject the Contractor to penalties up to and including termination of this Contract at the sole discretion of the Town.

D. The Town retains the legal right to inspect the papers of any contractor or subcontractor's employee who works on this Contract to ensure that the contractor or subcontractor is complying with the Contractor Immigration Warranty. Contractor agrees to assist the Town in regard to any such inspections.

E. The Town may, at is sole discretion, conduct random verification of the employment records of the Contractor and any subcontractors to ensure compliance with Contractor's Immigration Warranty. Contractor agrees to assist the Town in regard to any random verifications performed.

F. Neither the Contractor nor any subcontractor shall be deemed to have materially breached the Contractor Immigration Warranty if the Contractor or subcontractor establishes that it has complied with the employment verification provisions prescribed by section 274A and 274B of the Federal Immigration and Nationality Act and the E-Verify requirements prescribed by A. R. S. § 23-214, Subsection A.

G. The provisions of this Section must be included in any contract the Contractor enters into with any and all of its subcontractors who provide Services under this Contract or any subcontract. "Services" are defined as furnishing labor, time or effort in the State of Arizona by a contractor or subcontractor. Services include construction or maintenance of any structure, building or transportation facility or improvement to real property.

8. **METHOD OF PAYMENT**. Method of payment shall be set forth in **Exhibit "A"**. If payment is to be made monthly, Contractor shall prepare monthly invoices and progress reports which clearly indicate the progress to date and the amount of compensation due by virtue of that progress. All invoices shall be for Services completed or Goods accepted by the Town.

9. **TERMINATION**. Town may terminate this Contract, or any part thereof for its sole convenience, at any time without penalty or recourse. Contractor shall receive payment for Services or Goods satisfactorily completed and accepted by Town, as determined by Town in its reasonable discretion, based on the Goods and/or Services requirements and schedule for payment.

10. **INDEPENDENT CONTRACTOR**. It is understood that Contractor shall be an independent contractor with respect to Services and/or Goods provided under this Contract, and shall not be deemed to be a partner, employee, joint venture, agent, or to have any other legal relationship with Town.

11. **Notices**. Any notice to be given under this Contract shall be in writing, shall be deemed to have been given when personally served or when mailed by certified or registered mail, addressed as follows: Town: Town of Florence, Town Clerk, 775 N. Main Street, PO Box 2670, Florence, AZ 85132; and Contractor: Apache

Underground and Excavating LLC. Attn: Mark Gardner, P.O. Box 113, Lakeside, AZ 85929.

12. **INDEMNIFICATION**. To the fullest extent permitted by law, the Contractor, its successors, assigns and guarantors, shall pay, defend, indemnify and hold harmless the Town of Florence, its Mayor and Council members, its agents, officers, officials, representatives and employees, from and against all demands, claims proceedings, suits, damages, losses and expenses (including but not limited to attorney's fees, court costs, expert witnesses expenses and the costs of appellate proceedings), and all claim adjustment and handling expenses, relating to, arising out of, or alleged to have resulted from the acts, errors, mistakes, omissions, Goods or Services of the Contractor, its agents, employees or any tier of Contractor's subcontractors related to the Goods or Services in the performance of this Contract. Contractor's duty to defend, hold harmless and indemnify Town of Florence, its Mayor and Council members, its agents, officers, officials, representatives and employees shall arise in connection with any claim, damage, loss or expense that is attributable to bodily injury, sickness, disease, death, or injury to, impairment, or destruction of property including loss of use of resulting therefrom, caused by Contractor's acts, errors, mistakes, omissions, Goods, Services in the performance of this Contract including any employee of the Contractor, any tier of Contractor's subcontractors or any other person for whose acts, errors, mistakes, omissions, Goods, Services the Contractor may be legally liable.

13. **WARRANTY**. Contractor warrants that the Goods and Services will conform to the requirements of this Contract. Additionally, Contractor warrants that all Services will be performed in a good, workman-like and professional manner. The Town's acceptance of Goods or Services provided by Contractor shall not relieve Contractor from its obligations under this warranty. If any Goods or Services are of a substandard or unsatisfactory manner as determined by the Town, Contractor, at no additional charge to the Town, will provide Goods or redo such Services until they are in accordance with this Contract and to the Town's reasonable satisfaction. Unless otherwise agreed, Contractor, warrants that Goods will be new, unused, of most current manufacture and not discontinued, will be free of defects in materials and workmanship, will be provided in accordance with manufacturer's standard warranty for at least two (2) years unless otherwise specified, and will perform in accordance with manufacturer's published specifications.

14. **PURCHASING POLICY**. The Town of Florence Town Code and Purchasing Policy govern this procurement and are incorporated as part of this Contract by this reference.

15. **GOVERNING LAW**. This Contract shall be deemed to be made under, shall be construed in accordance with, and shall be governed by the laws of the State of Arizona, without reference to choice of law or conflicts of laws principles thereof.

The exclusive forum selected for any proceeding or suit in law or equity arising from or incident to this Contract shall be Pinal County, Arizona.

16. **PROHIBITED BOYCOTT**. Pursuant to A.R.S. 35-393.01, the Contractor, by execution of this Contract, certifies that it is not currently engaged in, and agrees for the duration of this Contract to not engage in, a boycott of Israel.

IN WITNESS WHEREOF, the Parties have executed this Contract effective as of the Effective Date set forth above.

TOWN OF FLORENCE, A municipal corporation

Date:_____

By: _____
Tara Walter, Mayor

ATTEST:

_____
Lisa Garcia, Town Clerk

Approved as to Form

_____
Cliff Mattice, Town Attorney

CONTRACTOR

By: _____
Date:_____

Its: _____

EXHIBIT G

Town of Florence Bid Tabulation Sheet

		General Ledger Account Number:	051-574-507
	Verbal (Only allowed $5,000 or less)	Date Prepared:	10/23/2018
	Written / Fax / Email (Mandatory over $5,000 bids attached)	Prepared By:	Susan Jonas
	Formal Sealed Bid :	Title of Bid:	Open Date:
			Close Date:

Item(s) (Include quality, Brand, Model & Color): **See Scope of Work**

	VENDORS		Payment Terms (Discount)	Availability	Who Pays Shipping?	Unit Price	Extended Price	Comments
1	Name:	Apache Underground and Excavating LLC					$ 678,080.00	See attached Scope of Work. We will be utilizing the Pine-Strawberry Water Improvement Disctrict JOC that was signed on October 18, 2018. RCA to Council 11/5/18
	Address:	P.O. Box 113			Tax:	included		
		Lakeside, AZ 85929			20%	Town Contingency	$ 135,616.00	
	Contact:	Mark Gardner					$813,696.00	
	Phone:	928-242-1055	Fax:					
	Email:	apacheunderground@frontiernet.net		Date Notified of Decision:				
	Quote #:		REQ # :		PO #:			
	Received:		Expires:					
2	Name:							
	Address:				Tax:			
					Freight:			
	Contact:						$ -	
	Phone:		Fax:					
	Email:			Date Notified of Decision:				
	Quote #:		REQ # :		PO #:			
	Received:		Expires:					
3	Name:							
	Address:				Tax:			
					Freight:			
	Contact:							
	Phone:		Fax:					
	Email:			Date Notified of Decision:				
	Quote #:		REQ # :		PO #:			
	Received:		Expires:					

Attach additional page(s), if necessary.

Vendor Selected: Apache Underground and Excavating LLC

Justification (if not lowest bid.): Able to utilize the PSWID JOC Contract that was just signed October 18, 2018

Department Head Approval:		Date:	10/23/18
Finance Director Approval:		Date:	10-23-18
Town Manager Approval:		Date:	10/23/18

Exhibits Attached:	Scope of Work
	PSWID JOC Contract signed 10/18/18

If over $24,999, must go to Town Council for approval.

Attach this approved form to purchase request with written quotes, if applicable.

EXHIBIT H

Project Name:	Florence 8-inch Water Main Plans	**Prepared by:**	EER	**Date:**	3/7/2019
Project No.:	486.12	**Checked by:**	TMB	**Date:**	3/7/2019
Location:	Florence, Arizona	**Client:**	Town of Florence		
Description:	8-in Water Main WU-38				

Item No.	Item Description	Unit	Quantity	Unit Price	Amount	Remarks
1	8-inch P.V.C. Pipe	LF	3,946	42	165,732	
2	8-inch D.I.P. Pipe	LF	20	120	2,400	
3	8-inch Gate Valve, B&C	EA	13	1800	23,400	
4	6-inch D.I.P. Pipe	LF	263	60	15,780	
5	6-inch Gate Valve, B&C	EA	14	900	12,600	
6	4-inch Gate Valve, B&C	EA	2	900	1,800	
7	1-inch Combination Air Release Valve	EA	1*	1700	1,700	*Quantity to be determined during construction.
8	Pipeline connections to existing system	EA	12	3000	36,000	
9	Service Tie Overs	EA	51	1800	91,800	
10	New Fire Hydrant	EA	6	5000	30,000	Includes 6"DIP
11	Existing Fire Hydrant Tie-Overs	EA	5	2000	10,000	Includes 6"DIP
12	Concrete Encased Sewer	EA	1	3000	3,000	
13	Curb Replacement	LF	186	60	11,160	Assumes rolled curb to be replaced in 3 ft long sections
14	Sidewalk Replacement	SF	744	30	22,320	Assumes replacement of 4 ft x 3 ft at each crossing
15	Concrete Valley Gutter Replacement	LF	50	30	1,500	Assumes valley gutter replaced in 9-ft. lengths
16	Asphalt Patch	SY	2,012	50	100,600	Assumes 4.5-ft trench width
17	Traffic Control	LS	1	6000	6,000	
18	Mobilization	LS	1	500	500	
	Subtotal				536,292	

ACTION MINUTES EXHIBIT I

MINUTES OF THE TOWN OF FLORENCE COUNCIL MEETING HELD ON MONDAY, NOVEMBER 5, 2018, AT 6:00 P.M., IN THE FLORENCE TOWN COUNCIL CHAMBERS, LOCATED AT 775 N. MAIN STREET, FLORENCE, ARIZONA.

1. CALL TO ORDER

Vice-Mayor Woolridge called the meeting to order at 6:00 pm.

2. ROLL CALL:

Present: Woolridge, Hawkins, Anderson, Wall, Larsen
Absent: Walter

3. MOMENT OF SILENCE

4. PLEDGE OF ALLEGIANCE

5. CALL TO THE PUBLIC

Call to the Public for public comment on issues within the jurisdiction of the Town Council. Council rules limit public comment to three minutes. Individual Councilmembers may respond to criticism made by those commenting, may ask staff to review a matter raised or may ask that a matter be put on a future agenda. However, members of the Council shall not discuss or take action on any matter during an open call to the public unless the matters are properly noticed for discussion and legal action.

6. PRESENTATIONS

a. Presentation by Joseph Carl Homes regarding their product and building in the Town of Florence. (Larry Harmer)

b. Presentation on the Veterans Memorial Project. (Bryan Hughes)

c. Presentation on Florence Gardens Phase IV and V project. (Chris Salas)

7. CONSENT: All items on the consent agenda will be handled by a single vote as part of the consent agenda, unless a Councilmember or a member of the public objects at the time the agenda item is called.

a. Authorization to contract with Truly Painting and More LLC, for repair and painting services in the Town Hall Council Chambers, in an amount not to exceed $26,981. (Chris Salas)

b. Authorization to contract with Arizona Generator Technology, also known as Gen-Tech, utilizing a Cooperative Contract through the State of Arizona Contract # ADPS15-079205, in an amount not to exceed $50,000 for maintenance of generators. (Chris Salas)

c. Approval of a contract with Arizona Office Technologies (AOT) for the purchase of seven multi-function copy machines. (Joe Jarvis)

d. Approval of accepting the register of demands ending September 30, 2018, in the amount of $1,492,028.35. (Joe Jarvis)

On motion of Councilmember Wall, seconded by Councilmember Larsen, and carried (5-0) to approve the Consent Agenda, as written.

8. NEW BUSINESS

a. Resolution No. 1683-18: Discussion/Approval/Disapproval of A RESOLUTION OF THE TOWN OF FLORENCE, PINAL COUNTY, ARIZONA, AUTHORIZING THE TOWN MANAGER AND TOWN ATTORNEYS TO FILE AN AMICUS CURIAE BRIEF WITH THE ARIZONA COURT OF APPEALS, AND ANY OTHER COURTS, REGARDING VANGILDER V. ARIZONA DEPARTMENT OF REVENUE, AND ALSO SUPPORTING THE PASSAGE OF THE PINAL COUNTY REGIONAL TRANSIT PLAN AND ASSOCIATED HALF-CENT SALES TAX. (Ben Bitter)

On motion of Councilmember Anderson, seconded by Councilmember Wall, and carried (5-0) to adopt Resolution No. 1683-18.

b. Ordinance No. 665-18: Discussion/Approval/Disapproval of AN ORDINANCE OF THE TOWN OF FLORENCE, PINAL COUNTY, ARIZONA, DECLARING CERTAIN REAL PROPERTY, HEREAFTER DESCRIBED, SURPLUS FOR USE BY THE TOWN AND AUTHORIZING THE SALE THEREOF, AND DECLARING AN EMERGENCY. (Lisa Garcia)

On motion of Councilmember Wall, seconded by Councilmember Anderson, and carried (5-0) to adopt Ordinance No. 665-18.

c. Discussion/Approval/Disapproval to award a contract to Apache Underground & Excavating, LLC, utilizing Pine-Strawberry Waterline Replacement and Water Facilities Improvement Construction Work – Job Order Contract dated October 18, 2018, in an amount not to exceed $813,696, for CIP WU-38 Water line replacement. (Chris Salas)

On motion of Councilmember Wall, seconded by Councilmember Hawkins, and carried (5-0) to award a contract to Apache Underground & Excavating, LLC, utilizing Pine-Strawberry Waterline Replacement and Water Facilities Improvement Construction Work – Job Order Contract dated October 18, 2018, in an amount not to exceed $813,696, for CIP WU-38 Water line replacement.

d. Discussion/Approval/Disapproval to award a contract to Coolidge Engine & Pump LLC, to outfit Well 2B in an amount not to exceed $239,573.46 for CIP WU-23 Well 2B Outfitting. (Chris Salas)

On motion of Councilmember Larsen, seconded by Councilmember Anderson, and carried (5-0) to award a contract to Coolidge Engine & Pump LLC, to outfit Well 2B in an amount not to exceed $239,573.46 for CIP WU-23 Well 2B Outfitting.

e. Discussion/Approval/Disapproval of authorizing the Town Manager to negotiate and execute a contract for the maintenance of Well #4 on behalf of the Town of Florence, without further

order of the Mayor and Council of the Town, in an amount not to exceed $60,000. (Chris Salas)

On motion of Councilmember Anderson, seconded by Councilmember Wall, and carried (5-0) to authorize the Town Manager to negotiate and execute a contract for the maintenance of Well #4 on behalf of the Town of Florence, without further order of the Mayor and Council of the Town, in an amount not to exceed $60,000.

f. Discussion/Approval/Disapproval of accepting Commissioner Shoppell's resignation from the Planning and Zoning Commission, and appointment of Planning and Zoning Alternate Duane Proulx to the Planning and Zoning Commission with a term to expire December 31, 2021. (Lisa Garcia)

On motion of Councilmember Hawkins, seconded by Councilmember Larsen, and carried (5-0) to accept Commissioner Shoppell's resignation from the Planning and Zoning Commission, and appointment of Planning and Zoning Alternate Duane Proulx to the Planning and Zoning Commission with a term to expire December 31, 2021.

g. Discussion/Approval/Disapproval of accepting Councilmember Guilin's resignation effective October 17, 2018 and instructing staff how to fill the vacated seat. (Lisa Garcia)

On motion of Councilmember Anderson, seconded by Councilmember Wall, and carried (5-0) to accept Councilmember Guilin's resignation effective October 17, 2018 and instruct staff to wait until the normal ceremonial meeting to seat a new councilmember.

9. MANAGER'S REPORT

10. DEPARTMENT REPORTS

a. Community Development
b. Community Services
c. Courts
d. Finance
e. Fire
f. Police
g. Public Works

11. CALL TO THE PUBLIC

12. CALL TO THE COUNCIL – CURRENT EVENTS ONLY

13. ADJOURNMENT

On motion of Councilmember Wall, seconded by Councilmember Anderson, and carried (5-0) to adjourn the meeting at 7:15 p.m.

Posted this 6th day of November 2018, on the Town of Florence website at www.florenceaz.gov by Maria Hernandez, Deputy Town Clerk.

JOB ORDER CONTRACT

[Solictation No.]

[Project Title]

CONTRACT FOR CONSTRUCTION

JOB ORDER CONTRACT AGREEMENT
TABLE OF CONTENTS

ARTICLE 1	**DEFINITIONS**
ARTICLE 2	**CONTRACT TERM**
ARTICLE 3	**PERFORMANCE OF THE WORK**
ARTICLE 4	**JOB ORDER DOCUMENTS**
ARTICLE 5	**MATERIAL AND WORKMANSHIP**
ARTICLE 6	**SITE CONDITIONS**
ARTICLE 7	**JOB ORDER SCHEDULES**
ARTICLE 8	**INSPECTION OF CONSTRUCTION AND ACCEPTANCE**
ARTICLE 9	**INVOICING AND PAYMENT**
ARTICLE 10	**CHANGES**
ARTICLE 11	**INSURANCE & BONDS**
ARTICLE 12	**INDEMNIFICATION**
ARTICLE 13	**DISPUTES**
ARTICLE 14	**TERMINATION AND DEFAULT**
ARTICLE 15	**WARRANTY OF CONSTRUCTION**
ARTICLE 16	**STANDARD TERMS AND CONDITIONS**

EXHIBITS

Exhibit A	JOC General Scope of Services
Exhibit B	RSOQ & Contractor's Response
Exhibit C	JOC Cost Proposal Forms (Pricing Matrix, Project Cost Sheet)
Exhibit D	Contractor's Contacts & Authorized Signature Form

JOB ORDER CONTRACTING
CONTRACT

THIS CONTRACT is entered into and made effective August 16, 2018, by and between the Pine-Strawberry Water Improvement District (PSWID), Arizona, an Arizona charter municipality (the "Owner"), and Apache Underground & Excavating LLC, (the "Job Order Contractor"). The parties agree as follows:

1. DEFINITIONS.

1.1. Owner. Owner means Owner's senior manager, Contracting Officer or a duly authorized representative, which means any person specifically authorized to act for Owner by executing the Contract and any modification thereto. Owner's duties include administration of the Contract, including the negotiation of change orders and modifications and assessing Job Order Contractor's technical performance and progress; inspecting and periodically reporting on such performance and progress during the stated period of performance, and finally certifying as to the acceptance of the Work in its entirety or any portion thereof, as required by the Contract documents.

1.2. Job Order Contractor. Job Order Contractor means Job Order Contractor's senior manager or its duly authorized representative or any person specifically authorized to act for Job Order Contractor by executing the Contract, and any modifications thereto. Job Order Contractor's duties include administration of the Contract and performance of the Work.

1.3. Contract. Contract means this agreement including its exhibits and any Job Orders that may be issued.

1.4. Subcontract. Subcontract means any Contract including purchase orders (other than one involving an employer-employee relationship) entered into by Job Order Contractor calling for equipment, supplies or services required for Contract performance, including any modifications thereto.

1.5. Job Order. Job Order means a specific written agreement between the Owner and the Job Order Contractor for Work to be performed under this Contract for an individual, mutually agreed upon scope of work, schedule and price.

1.6. Work. Work means in response to Job Orders that may be mutually agreed upon and issued periodically by Owner, Job Order Contractor shall, except as may be specified elsewhere in the Contract, furnish all necessary labor, materials, tools, supplies, equipment, transportation, supervision, management, and perform all operations necessary and required for planning, survey, design, construction work, and commissioning which will be defined and further described as to specific project requirements in each Job Order. The Work shall be performed in accordance with the requirements set forth in each Job Order and as further specified in ***Exhibit "A"***(JOC General Scope of Services), ***Exhibit "B"*** (RSOQ & Contractor's Response), ***Exhibit "C"*** (JOC Cost Proposal Forms), and in ***Exhibit "D"*** (Contractor's Contacts), all of which are incorporated herein and made a part hereof.

1.7. Punch List Preparation. A minimum of thirty (30) days prior to Final Completion the Job Order Contractor, in conjunction with the Owner, shall prepare a comprehensive list of Punch list items, which the Owner may edit and supplement. The Job Order Contractor shall proceed promptly to complete and correct Punch list items. Failure to include an item on the Punch list does not alter the responsibility of the Job Order Contractor to complete all Work in accordance

with the Contract Documents. Warranties required by the Contract Documents shall not commence until the date of Final Completion unless otherwise provided in the Contract Documents.

1.8. Final Completion. Final Completion of the Work shall be deemed to have occurred on the later of the dates that the Work passes a Final Completion inspection and acceptance by the Owner. Final Completion shall not be deemed to have occurred and no final payment shall be due the Job Order Contractor or any of its subcontractors or suppliers until the Work has passed the Final Completion inspection and acceptance and all required Final Completion close-out documentation items has been produced to the Owner by the Job Order Contractor.

1.9. Reference Standards

1.9.1. The "Uniform Standard Specifications for Public Works Construction" and the "Uniform Standard Details for Public Works Construction" which are sponsored and distributed by the Maricopa Association of Governments (MAG), and which are hereinafter referred to as the "MAG Specifications", are hereby adopted as part of these contract documents.

1.9.2. The OWNER hereby uses the "Uniform Standard Details for Public Works Construction from the Maricopa County Association of Governments by reference with certain exceptions.

1.9.3. A copy of these documents is available upon request or on the MAG website.

2. CONTRACT TERM

2.1. Contract Term. The term of the Contract shall commence on the date it was executed by both parties and shall continue for a period of one (1) year thereafter in accordance with the terms and conditions of this Contract. By mutual written Contract Amendment, any resultant contract may be extended for supplemental periods of up to a maximum of forty-eight (48) months. Job Orders may be issued at any time during the term of this Contract. This Contract will remain in full force and effect during the performance of any Job Order.

2.2. Job Order. In response to Job Orders that may be mutually agreed upon and issued periodically by Owner, Job Order Contractor shall perform the Work, except as may be specified elsewhere in the Contract, which will be defined and further described as to specific project requirements in each Job Order. The Work shall be performed in accordance with the requirements set forth in each Job Order and as further specified in ***Exhibit "A"***(JOC General Scope of Services), ***Exhibit "B"*** (RSOQ & Contractor's Response), ***Exhibit "C"*** (JOC Cost Proposal Forms), and in ***Exhibit "D"*** (Contractor's Contacts), all of which are incorporated herein and made a part hereof.

2.3. Mutual Agreement. This Contract embodies the agreement of Owner and Job Order Contractor to terms and conditions which will govern any Work that may be prescribed under a Job Order that may be issued by Owner and agreed to by Job Order Contractor. Nothing herein shall be construed as requiring Owner to issue any Job Order, nor requiring Job Order Contractor to accept any Job Order, it being the intent that both parties must mutually agree to any specific Work before a Job Order may be issued.

2.4. Cooperative Purchasing: This contract shall be for the use of the OWNER. In addition, specific eligible political subdivisions and nonprofit educational or public health institutions may also participate at their discretion. In order to participate in any the contract, a political subdivision or nonprofit educational or public health institution must have been invited to participate in this specific solicitation and the contractor must be in agreement with the cooperative transaction. In

addition to cooperative purchasing, any eligible agency may elect to participate (piggyback) on the contract; the specific eligible political subdivision, nonprofit educational or public health institution and the contractor must be in agreement. Any orders placed to the contractor will be placed by the specific agencies participating in this purchase. Payment for purchases made under this agreement will be the sole responsibility of each participating agency. The Owner shall not be responsible for any disputes arising out of transactions made by others.

3. PERFORMANCE OF THE WORK

3.1. Job Order Agreement. Performance of the Work shall be undertaken only upon the issuance of written Job Orders by Owner. Job Orders shall be in accordance with the requirements specified in ***Exhibit "A"*** (JOC General Scope of Services), and shall set forth, with the necessary particularity, the following:

3.1.1. Contract number along with Job Order Contractor's name;

3.1.2. Job Order number and date;

3.1.3. The agreed Work and applicable technical specifications and drawings;

3.1.4. The agreed period of performance and, if required by Owner, a work schedule;

3.1.5. The place of performance;

3.1.6. The agreed total price for the Work to be performed;

3.1.7. Submittal requirements;

3.1.8. Owner's authorized representative who will accept the completed Work;

3.1.9. Signatures by the parties hereto signifying agreement with the specific terms of the Job Order; and

3.1.10. Such other information as may be necessary to perform the Work.

3.2. Job Order Contractor Duties and Obligations.

3.2.1. Permits & Responsibilities. Job Order Contractor shall be responsible for processing of drawings, for approval by appropriate oversight bodies; for obtaining any necessary licenses and permits; and for complying with any Federal, State and municipal laws, codes, and regulations applicable to the performance of the Work. Owner will reimburse Job Order Contractor for the actual, documented costs of construction permits required for the performance of the Work. Job Order Contractor shall also be responsible for all damages to persons or property that occur as a result of Job Order Contractor's fault or negligence, and shall take proper safety and health precautions to protect the Work, the workers, the public, and the property of others. Job Order Contractor shall also be responsible for all materials delivered and work performed until completion and acceptance of the entire Work, except for any completed unit of Work which may have been accepted under the Contract.

3.2.2. Self-Performance By The Job-Order-Contractor. The JOC shall be allowed to bid as a subcontractor for work over $50,000 and, if it is the lowest acceptable bidder. Any change orders for self-performed work shall require pre-approval by the owner.

3.2.3. Outdoor Construction Restrictions. The OWNER restricts outdoor construction as listed in the following table:

	Construction Type	April 2 – September 29	September 30 – April 1
A	Concrete Work	5:00 a.m. to 7:00 p.m.	6:00 a.m. to 7:00 p.m.
B	Other Construction (within 500 feet of residential area)	6:00 a.m. to 7:00 p.m.	7:00 a.m. to 7:00 p.m.
C	Construction Work (more than 500 feet of residential area)	5:00 a.m. to 7:00 p.m.	5:00 a.m. to 7:00 p.m.

3.2.3.1. No interference with the traffic flow on arterial streets shall be permitted during the hours of 6:00 a.m. to 8:30 a.m. or from 4:00 p.m. to 7:00 p.m. unless prior authorization is obtained in writing by the OWNER Traffic Engineer or their assignee. Specific work hours may be stipulated by the OWNER on the project barricade plan.

3.2.3.2. During off peak hours, the minimum number of lanes shall be two lanes (one in each direction) on streets with four lanes or less and four lanes (two in each direction) on streets with five or more lanes.

3.2.3.3. Night work must have prior authorization from the OWNER. In addition, certain areas of the OWNER may have seasonal or special event restrictions for construction work as designated by the OWNER on a case by case basis.

3.2.4. Jobsite Superintendent. During performance of a Job Order and until the Work is completed and accepted, Job Order Contractor shall directly superintend the Work or assign a competent superintendent who will supervise the performance of Work and is satisfactory to Owner and has authority to act for Job Order Contractor.

3.2.4.1. Job Order Contractor will ensure that the site supervisor for the project is English proficient and that there is at least one English proficient person at the construction site at all times work is being performed in order to communicate with the OWNER.

3.2.5. Construction Layout. Job Order Contractor shall lay out its work in accordance with the Contract plans and specifications and shall be responsible for all measurements in connection with the layout of the Work. Job Order Contractor shall furnish, at its own expense, all stakes, templates, platforms, equipment, tools, materials, and labor required to layout any part of the Work. Job Order Contractor shall also be responsible for maintaining and preserving all control points established by Owner.

3.2.6. Survey Control Points. Existing survey markers (either brass caps or iron pipes) shall be protected by the Contractor or removed and replaced under direct supervision of the OWNER or his authorized representatives. Survey monuments shall be constructed to the requirements of MAG Specifications, Section 405, and Standard Details. Lot corners shall not be disturbed without knowledge and consent of the property owner. The Contractor shall replace benchmarks, monuments, or lot corners moved or destroyed during construction at no expense to the Owner. Contractor and his sureties shall be liable for correct replacement of disturbed survey benchmarks except where the Owner elects to replace survey benchmarks using his own forces.

3.2.7. Traffic Regulations. All traffic affected by this construction shall be regulated in accordance with the ADOT/Gila County – Traffic Barricade manual, latest edition, and ADOT/Gila

County in the Traffic Barricade Manual shall be referred to as the OWNER District Manager for interpretation.

At the time of the pre-construction conference, the Contractor shall designate an employee who is well qualified and experienced in construction traffic control and safety to be responsible for implementing, monitoring and altering traffic control measure, as necessary. At the same time the OWNER will designate a representative who will be responsible to see that all traffic control and any alterations are implemented and monitored to the extent that traffic is carried throughout the work area in an effective manner and that manner and that motorists, pedestrians, bicyclists and workers are protected from hazard and accidents.

3.2.7.1. The following shall be considered major streets: State Routes 87 & 260, mile (section line), arterial and collector (mid-section line and quarter section line) streets so classified by the Gila County.

3.2.7.2. All traffic control devices required for this project shall be the responsibility of the Contractor. The Contractor shall place advance warnings; **REDUCE SPEED, LOOSE GRAVEL, 25 MPH SPEED LIMIT** and **DO NOT PASS** signs in accordance with the Traffic Barricade Manual.

3.2.7.3. The Contractor shall provide, erect and maintain all necessary flashing arrow boards, barricades, suitable and sufficient warning lights signals and signs, and shall take all necessary precautions for the protection of the work and safety of the public. The Contractor shall provide, erect and maintain acceptable and adequate detour signs at all closures and along detour routes.

3.2.7.4. All barricades and obstructions shall be illuminated at night, and all safety lights shall be kept burning from sunset until sunrise. All barricades and signs used by the Contractor shall conform to the standard design, generally accepted for such purposes.

3.2.7.5. The Contractor shall insure that all existing traffic signs are erect, clean and in full view of the intended traffic at all times. Street name signs at major street intersections shall be maintained erect at all times. If these signs should interfere with construction, the Contractor shall notify the Inspector at least forty eight (48) hours in advance for PSWID personnel to temporarily relocate said signs. The Contractor will re-set all traffic and street name signs to permanent locations when notified by the Engineer that construction is complete unless otherwise stated in the specifications. Payment for this item shall be made at the agreed upon contract allowance price for TRAFFIC CONTROL.

3.2.7.6. The Gila County Engineering Department shall determine if construction activities or traffic hazards at the construction project *require* the use of Police Assistants or AZ Post Certified Peace Officers, alternatively, *if it is determined that* flagmen are *sufficient*, it shall be the Contractor's responsibility to provide adequate personnel including flagmen to direct traffic safely. All PSWID projects shall only use Gila County Sherriff Office or Department of Public Safety Office or their designee has determined that no such assistants or officers are available. Arrangements for Police Assistant or Police Officer services should be made with the liaison officer at the Gila County Sherriff's Office.

3.2.7.7. Manual traffic control shall be in conformity with and approved Traffic Barricade Manual. A traffic control plan shall be submitted to the Gila County Engineering Department indicating whether a need for traffic control exists during the project. The traffic control plan shall

be submitted electronically, and the liaison officer shall be contacted at the Gila County Engineering Department.

3.2.7.8. When traffic hazards at construction sites warrant the use of certified police personnel to direct traffic, arrangement should be made with the liaison officer at the Gila County Sheriff Department.

3.2.7.9. The assembly and turnarounds of the Contractor's equipment shall be accomplished using adjacent local streets when possible.

3.2.7.10. Equipment used and/or directed by the Contractor shall travel with traffic at all times. Supply trucks shall travel with traffic except when being spotted. Provide a flagman or officer to assist with this operation.

3.2.7.11. During construction, it may be necessary to alter traffic control. Alterations shall be in accordance with the approved Traffic Barricade Manual.

3.2.7.12. No street within this project may be closed to through traffic or to local emergency traffic without prior written approval by the OWNER. Written approval may be given if sufficient time exists to allow for notification of the public at least two (2) days in advance of such closing. Partial closure of streets within the project shall be done in strict conformity with written directions to be obtained from the OWNER.

3.2.7.13. Caution should be used when excavating near intersections with traffic signal underground cable. Notify the OWNER twenty-four (24) hours in advance of any work at such intersections. The Contractor shall install and maintain temporary overhead traffic signal cable as specified by the OWNER when underground conduit is to be severed by excavations at intersections. The Contractor shall provide an off-duty uniformed police officer to direct traffic while the traffic signal is turned off and the wiring is transferred. All damaged or modified traffic signal overhead and underground items shall be repaired and restored to the OWNER's satisfaction. Magnetic detector loops shall under no circumstances be spliced.

3.2.7.14. The Contractor shall address how local access to adjacent properties will be handled in accordance with the specification herein.

3.2.7.15. Where crossings of existing pavements occur, no open trenches shall be permitted overnight, but plating may be permitted if conditions allow as determined by the OWNER or authorized representative. If plates cannot be used, crossings shall be back-filled, or the Contractor shall provide a detour.

3.2.8. <u>Operations & Storage</u>. Job Order Contractor shall confine all operations (including storage of materials) to areas authorized or approved by Owner.

3.2.9. <u>Cleaning Up & Refuse Disposal</u>. Job Order Contractor shall at all times keep the site, including storage areas, free from accumulations of waste materials. Before completing the Work, Job Order Contractor shall remove from the premises any rubbish, tools, equipment, and materials that are not the property of Owner. Upon completing the Work, Job Order Contractor shall leave the site in a clean and orderly condition satisfactory to Owner.

3.2.9.1. Final cleanup of the premises shall be included in the period of performance of the Job Order.

3.2.9.2. Job Order Contractor shall be responsible for all construction refuse disposal containers and their removal from the site.

3.2.9.3. Disposal of any hazardous materials not addressed and priced in the Job Order will be segregated for disposal by Owner unless Owner requires Job Order Contractor to dispose of the materials in which case, an equitable adjustment in the price will be negotiated and agreed.

3.2.9.4. The Contractor and/or subcontractor shall be required to use approved solid waste disposal services. This requirement is not intended to preclude other methods or means for hauling debris or excess material from the project site such as trucking large volumes of material, including soil, building demolition, or hazardous and special wastes. The intent is to use approved solid waste service where standard waste disposal is needed. Specifically, all roll-off and front-load containers used on a PSWID construction site shall be contracted for through an approved solid waste provider. It is the contractor's responsibility to contact and make all necessary arrangements for these services. All charges for these services are the responsibility of the contractor.

3.2.10. Existing Improvements and Utilities. Job Order Contractor shall protect from damage all existing improvements and utilities at or near the site and on adjacent property of third parties, the locations of which are made known to or should be known by Job Order Contractor. Job Order Contractor shall repair any damage to those facilities, including those that are the property of third parties, resulting from failure to comply with the requirements of the Job Order or failure to exercise reasonable care in performing the Work. If Job Order Contractor fails or refuses to repair the damage promptly, Owner may have the necessary repair work performed and charge the cost to Job Order Contractor.

3.2.11. Safety. Job Order Contractor shall be responsible for compliance with all safety rules and regulations of the Federal Occupational Safety and Health Act of 1970 (OSHA), all applicable state and local laws, ordinances, and regulations during the performance of the Work. Job Order Contractor shall indemnify Owner for fines, penalties, and corrective measures that result from the acts of commission or omission of Job Order Contractor, its subcontractors, if any, agents, employees, and assigns and its failure to comply with such safety rules and regulations.

3.2.11.1. Job Order Contractor Safety Compliance. Job Order Contractor shall furnish and enforce the use of individual protective equipment as needed to complete the Work, including hard hats, rain gear, protective foot wear, protective clothing and gloves, eye protection, ear protection, respirators, safety belts, safety harnesses, safety lifelines and lanyards, and high visibility reflective safety vests.

3.2.11.2. Job Order Contractor Provided Warnings. Job Order Contractor shall provide warning signs, barricades and verbal warnings as required.

3.2.11.3. Emergency Procedures. Job Order Contractor shall inform its employees of emergency procedures to be adhered to in case of a fire, medical emergency, or any other life-threatening situations.

3.2.11.4. Accident Notification. Job Order Contractor shall promptly notify Owner of any recordable accident involving personnel or damage to material and equipment. Copies of any injury reports or accident investigation reports shall be provided to the Owner.

3.2.11.5. Jobsite Safety Documents. Job Order Contractor shall maintain a set of OSHA articles and Material Safety Data Sheets (MSDS) at the jobsite office as they apply to the Work being performed. Copies shall be provided to Owner when requested.

3.2.11.6. Job Order Contractor's Safety Program. Job Order Contractor shall submit to Owner a copy of its safety policies and program procedures which establish the safety rules and

regulations as they are to be applied to performance of the Work. These documents shall be submitted by Job Order Contractor within fourteen (14) calendar days after issuance of the initial Job Order and prior to the commencement of the Work.

3.2.11.7. Job Order Contractor Safety Representative. Job Order Contractor shall assign, during performance of the Work, a designated safety representative to develop and monitor the project safety program. The name, company address, and telephone number of the assigned individual shall be submitted to Owner by Job Order Contractor along with its safety policies and program procedures.

3.2.11.8. Emergency Medical Treatment. Job Order Contractor shall make available for its employees and those of its subcontractors, while they are performing Work on the site, emergency medical treatment either at the site or at a nearby medical facility.

3.2.11.9. Owner's Right to Monitor. Owner reserves the right to approve and monitor Job Order Contractor's safety policies and program procedures as applied during performance of the Work. Failure to comply with safety policies and program procedures, once approved by Owner, shall be cause for the termination of the Job Order in accordance with ***Article 14***.

3.2.11.10. First Aid Kit. Job Order Contractor shall provide and maintain on the jobsite, at all times when Work is in progress, a completely stocked first aid kit which contains all standard emergency medical supplies.

3.2.11.11. Fire Extinguisher. Job Order Contractor shall provide and maintain on the jobsite, at all times when Work is in progress, a fully charged fire extinguisher appropriate for the potential fire hazard.

3.2.12. Dissemination of Contract Information. Job Order Contractor shall not publish, permit to be published, or distribute for public consumption, any information, oral or written, concerning this Contract, any Job Order or the Work performed under this Contract, without the prior consent of Owner.

3.2.13. Shop Drawings. Job Order Contractor's duties under this Contract include the preparation of shop drawings or sketches necessary to permit orderly construction of Owner's design plans. Job Order Contractor agrees to provide detailed design drawings and plans if requested by Owner.

3.2.14. Jobsite Drawings and Specifications. Job Order Contractor shall keep on the Work site a copy of the drawings and specifications and shall at all times give Owner access thereto.

3.3. Owner Rights and Obligations.

3.3.1. Suspension of Work.

3.3.1.1. Owner's Written Order. Owner may order Job Order Contractor, in writing, to suspend, delay, or interrupt all or any part of the Work for a period of time that Owner determines reasonably appropriate.

3.3.1.2. Work Delay or Suspension. If the performance of all or any part of the Work is suspended, delayed, or interrupted by an act of Owner in the administration of a Job Order, or by Owner's failure to act within the time specified in the Job Order, an adjustment shall be made for any increase in the cost of performance of the Job Order necessarily caused by the suspension, delay, or interruption, and the Job Order will be modified in writing accordingly.

3.3.1.3.Job Order Contractor Costs. A claim under this Subparagraph 3.3.1 shall not be allowed for any costs incurred more than thirty (30) calendar days before Job Order Contractor shall have notified Owner in writing of the act or failure to act (but this requirement shall not apply as to a claim resulting from a suspension order), and unless the claim, in an amount stated, is asserted in writing as soon as practicable after the termination of such suspension, delay, or interruption, but not later than the date of final payment under the Job Order.

3.3.2. Owner's Right to Possession. Owner shall have the right to take possession of or use any completed or partially completed part of the Work. Before taking possession of or using any Work, Owner shall furnish Job Order Contractor a list of items of work remaining to be performed or corrected on those portions of the Work that Owner intends to take possession of or use. However, failure of Owner to list any item of Work shall not relieve Job Order Contractor of responsibility for complying with the terms of this Contract. Owner possession or use shall not be deemed an acceptance of any Work under this Contract.

3.3.2.1.Owner's Possession or Use. While Owner has such possession or use, Job Order Contractor shall be relieved of the responsibility for the loss of or damage to the Work resulting from Owner's possession or use, notwithstanding the terms of Subparagraph 3.2.1. If prior possession or use by Owner delays the progress of the Work or causes additional expense to Job Order Contractor, an equitable adjustment shall be made in the Job Order price or the period of performance, and the Job Order shall be modified in writing accordingly.

3.3.3. Other Contracts. Owner may undertake or award other Contracts for additional work at or near the site of Work under this Contract. Job Order Contractor shall fully cooperate with the other Job Order Contractors and with Owner's employees and shall carefully adapt scheduling and performing the Work under this Contract to accommodate the additional work, heeding any direction that may be provided by Owner. Job Order Contractor shall not commit or permit any act that will interfere with the performance of its Work by any other contractor or by Owner's employees.

3.4. Job Order Amendment. Job Orders may be amended by Owner in the same manner as they are issued.

3.5. Job Order Value. The maximum Job Order value is One Million Dollars ($1,000,000), except as provided by ***Article 16.32.1***.

4. JOB ORDER DOCUMENTS

4.1. Specification and Drawings. Anything mentioned in the specifications and not shown on the drawings, or shown on the drawings and not mentioned in the specifications, shall be of like effect as if shown or mentioned in both. In case of differences between drawings and specifications, the drawings shall govern. In case of discrepancy either in the figures, in the drawings, or in the specifications, the matter shall be promptly submitted to Owner, who shall promptly make a determination in writing. Any adjustment by Job Order Contractor without such a determination shall be at its own risk and expense. Owner shall furnish from time to time such detail drawings and other information as considered necessary, unless otherwise provided.

4.1.1. Wherever in the specifications or upon the drawings the words "directed," "required," "ordered," "designated," "prescribed," or words of like import are used, it shall be understood that the "direction," "requirement," "order," "designation," or "prescription," of Owner is intended and similarly the words "approved," "acceptable," "satisfactory," or words of like import

shall mean "approved by," or "acceptable to," or "satisfactory to" Owner, unless otherwise expressly stated.

4.1.2. Where "as shown," "as indicated," "as detailed," or words of similar import are used, it shall be understood that the reference is made to the drawings accompanying the Contract unless stated otherwise. The word "provided" as used herein shall be understood to mean "provide complete in place," that is "furnished and installed.

4.2. Shop Drawings. Shop drawings include sketches, diagrams, layouts, schematics, descriptive literature, illustrations, schedules, performance and test data, and similar materials furnished by Job Order Contractor to explain in detail specific portions of the Work. Owner may duplicate, use, and disclose in any manner and for any purpose shop drawings delivered under the Contract. Shop drawings means drawings submitted to Owner by Job Order Contractor showing in detail:

4.2.1. The proposed fabrication and assembly of structural elements and,

4.2.2. The installation (i.e., form, fit and attachment details) of materials or equipment.

4.2.3. The construction and detailing of elements of the Work.

4.3. Shop Drawing Coordination. Job Order Contractor shall coordinate all shop drawings, and review them for accuracy, completeness, and compliance with Contract requirements and shall indicate its approval thereon as evidence of such coordination and review. Shop drawings submitted to Owner without evidence of Job Order Contractor's approval may be returned for resubmission. Owner will indicate its approval or disapproval of the shop drawings and if not approved as submitted shall indicate Owner's reasons therefore. Any work done before such approval shall be at Job Order Contractor's risk. Approval by Owner shall not relieve Job Order Contractor from responsibility for any errors or omissions in such drawings, nor from responsibility for complying with the requirements of the Contract, except with respect to variations described and approved in accordance with ***Article 4.4*** below.

4.4. Shop Drawing Modifications. If shop drawings show variations from the Job Order requirements, Job Order Contractor shall describe such variations in writing, separate from the drawings, at the time of submission. If Owner approves any such variation, Owner shall issue an appropriate Contract modification, except that, if the variation is minor and does not involve a change in price or in time of performance, a modification need not be issued.

4.5. Shop Drawing Omissions. Omissions from the drawings or specifications or the mis-description of details of work which are manifestly necessary to carry out the intent of the drawings and specifications, or which are customarily performed, shall not relieve Job Order Contractor from performing such omitted or mis-described details of the Work but they shall be performed as if fully and correctly set forth and described in the drawings and specifications.

4.6. Owner Furnished Drawings. Job Order Contractor shall check all Owner furnished drawings immediately upon receipt and shall promptly notify Owner of any discrepancies. Any errors or omissions in Owner furnished drawings are the responsibility of the Owner to rectify, including associated costs. Figures marked on drawings shall be followed in preference to scale measurements. Large scale drawings shall govern small scale drawings. Job Order Contractor shall compare all drawings and verify the figures before laying out the Work and will be responsible for any errors which might have been avoided thereby.

4.7. Shop Drawing Submittal. Job Order Contractor shall submit to Owner for approval an appropriate number of copies of all shop drawings as called for under the various headings of these specifications. Sets of all shop drawings will be retained by Owner and one set will be returned to Job Order Contractor with annotation of approval or rejection within one (1) week after submission, unless a longer review period is necessary by mutual agreement between Owner and Job Order Contractor.

4.8. Use of Job Order Documents. All drawings (to include as-built drawings), sketches, designs, design data, specifications, note books, technical and scientific data provided to Job Order Contractor or developed by Job Order Contractor pursuant to the Contract and all photographs, negatives, reports, findings, recommendations, data and memoranda of every description relating thereto, as well as all copies of the foregoing relating to the Work or any part thereof, shall be the property of Owner and may be used by Owner without any claim by Job Order Contractor for additional compensation, unless such material developed by Job Order Contractor does not result in an issued Job Order. In such cases, Job Order Contractor will receive reasonable reimbursement for the development of such materials before Owner uses them in any manner whatsoever. In addition, Owner agrees to hold Job Order Contractor harmless to the extent permitted by law from any legal liability arising out of the Owner's use of such materials.

5. MATERIAL AND WORKMANSHIP

5.1. Suitability of Material and Equipment. All equipment, material, and articles incorporated in the Work covered by this Contract shall be new and of the most suitable grade for the purpose intended, unless otherwise specifically provided in the Contract. References in the specifications to equipment, material, article, or patented process by trade name, make, or catalog number, shall be regarded as establishing a standard of quality and shall not be construed as limiting competition. Job Order Contractor may, at its option, use any equipment, material, article, or process that, in the sole judgment and prior written approval of the Owner, is equal to that named in the specifications.

5.2. Owner Approval. Job Order Contractor shall obtain Owner's approval of the equipment to be incorporated into the Work. When requesting approval, Job Order Contractor shall furnish to Owner the name of the manufacturer, the model number, and other information concerning the performance, capacity, nature, and rating of the equipment. When required by the Contract or by Owner, Job Order Contractor shall also obtain Owner's approval of the material or articles which Job Order Contractor contemplates incorporating into the Work. When requesting approval, Job Order Contractor shall provide full information concerning the material or articles. When directed to do so, Job Order Contractor shall submit samples for approval. Machinery, equipment, material and articles that do not have the required approval shall be installed or used at the risk of subsequent rejection.

5.3. Testing of Materials. Unless otherwise specified in a Job Order, the Job Order Contractor shall be responsible for any required testing of materials prior to incorporation into the Work. Reimbursement for testing required by third party entities will be included in the individual Job Order.

5.4. Workmanship. All work under the Contract shall be performed in a skillful and workmanlike manner.

6. SITE CONDITIONS

6.1. Site Investigation. Job Order Contractor acknowledges that it has taken steps reasonably necessary to ascertain the nature and location of the Work, and that it has investigated and satisfied itself as to the general and local conditions which can affect the Work or its cost, including but not limited to:

6.1.1. Conditions bearing upon transportation, disposal, handling, and storage of materials;

6.1.2. The availability of labor, water, electric power, and roads;

6.1.3. Uncertainties of weather, river stages, tides, or similar physical conditions at the site;

6.1.4. The visible conformation and conditions of the ground; and

6.1.5. The character of equipment and facilities needed preliminary to and during work performance.

6.2. Surface and Subsurface Investigation. Job Order Contractor also acknowledges that it has satisfied itself as to the character, quality, and quantity of surface and subsurface materials or obstacles to be encountered insofar as this information is reasonably ascertainable from an inspection of the site, including all exploratory work done by Owner, as well as from the drawings and specifications made a part of this Contract. Owner will provide to Job Order Contractor all subsurface investigation reports it has commissioned, and has knowledge of, that reasonably reflect expected conditions at the location of the Job Order.

6.3. Differing Site Conditions. Job Order Contractor shall promptly, and before the conditions are disturbed, give a written notice to Owner of:

6.3.1. Subsurface or latent physical conditions at the site which differ materially from those indicated in the Contract, or

6.3.2. Unknown physical conditions at the site, of an unusual nature, which differ materially from those ordinarily encountered and generally recognized as inherent in work of the character provided for in the Contract.

6.4. Owner Investigation. Owner shall investigate the site conditions promptly after receiving the notice. If the conditions do materially so differ and cause an increase or decrease in Job Order Contractor's cost of, or the time required for, performing any part of the Work, whether or not changed as a result of the conditions, an equitable adjustment shall be made and the Job Order modified in writing accordingly.

6.5. Written Notice of Differing Site Conditions. No request by Job Order Contractor for an equitable adjustment to a Job Order under this ***Article 6*** shall be allowed, unless Job Order Contractor has given the written notice required.

6.6. Payment Adjustment. No request by Job Order Contractor for an equitable adjustment to a Job Order for differing site conditions shall be allowed if made after final payment under such Job Order.

7. JOB ORDER SCHEDULES

7.1. Construction Schedule. If the Job Order Contractor fails to submit a schedule with the Job Order, Owner may withhold approval of progress payments until Job Order Contractor submits the required schedule. If required, the Job Order Contractor will submit for approval with

the signed Job Order a practicable schedule showing the sequence in which Job Order Contractor proposes to perform the Work, and the dates on which Job Order Contractor contemplates starting and completing the several salient features of the Work (including acquiring materials, plant and equipment). The schedule may be a formal computerized schedule or a progress chart in a bar chart format of suitable scale to indicate appropriately the percentage of Work scheduled for completion by any given date during the period. In either case, the basic information should be the same and the schedule or chart must contain as a minimum:

7.1.1. A detailed list of work activities or work elements.

7.1.2. Show the logical dependencies (ties) to indicate what Work must be accomplished before other Work can begin.

7.1.3. Show early start and early finish dates along with late start and late finish dates for each work activity or work element.

7.2. Failure to Submit Schedule. Failure of Job Order Contractor to comply with the requirements of Owner under this clause shall be grounds for a determination by Owner that Job Order Contractor is not prosecuting the Work with sufficient diligence to ensure completion within the time specified in the Job Order. Upon making this determination, Owner may terminate Job Order Contractor's right to proceed with the Work if not cured within seven (7) days after written notice is provided, or any separable part of it, in accordance with ***Article 14***.

7.3. Progress Report. Job Order Contractor shall submit a progress report every thirty (30) days, or as directed by Owner, and upon doing so shall immediately deliver a current schedule to Owner if it has materially changed since the last submission of a schedule. If Job Order Contractor falls behind the approved schedule, Job Order Contractor shall take steps necessary to improve its progress, including those that may be reasonably required by Owner. Without additional cost to Owner, Owner may require Job Order Contractor to increase the number of shifts, overtime operations, days of work, and/or the amount of construction plant or equipment, and to submit for approval any supplementary schedule or schedules in chart form as Owner deems necessary to demonstrate how the approved rate of progress will be regained.

7.4. Emergency Work. Job Order Contractor will give top priority to any emergency Work Owner may have and will allocate all resources necessary to accomplish such Work in accordance with Owner's schedule requirements. To the extent the Job Order Contractor incurs additional cost, expense or schedule delay in performing Owner's emergency Work, Owner will equitably adjust the Contract in accordance with ***Article 10***.

8. INSPECTION OF CONSTRUCTION AND ACCEPTANCE

8.1. Job Order Contractor Inspection System. Job Order Contractor shall maintain an adequate inspection system and perform such inspections as will ensure that the Work called for conforms to Job Order requirements. Job Order Contractor shall maintain complete inspection records and make them available to Owner. All work shall be conducted under the general direction of Owner and is subject to inspection and test by Owner at all places and at all reasonable times before acceptance to ensure strict compliance with the terms of the Contract.

8.2. Owner Inspections and Tests. Owner inspections and tests are for the sole benefit of Owner and do not:

8.2.1. Relieve Job Order Contractor of responsibility for providing adequate quality control measures;

8.2.2. Relieve Job Order Contractor of responsibility for damage to or loss of the material before acceptance;

8.2.3. Constitute or imply acceptance; or

8.2.4. Affect the continuing rights of Owner after acceptance of the complete work.

8.3. Job Order Contractor Responsibilities. The presence or absence of an inspector does not relieve Job Order Contractor from any Contract requirement, nor is the inspector authorized to change any term or condition of the specification without Owner's written authorization.

8.4. Job Order Contractor Performance. Job Order Contractor shall promptly furnish, without additional charge, all facilities, labor, and material reasonably needed for performing such safe and convenient inspections and tests as may be required by Owner. Owner may charge to Job Order Contractor any additional cost of inspection or test when Work is not ready at the time specified by Job Order Contractor for inspection or test, or when prior rejection makes re-inspection or retest necessary. Owner shall perform all inspections and tests in a manner that will not unnecessarily delay the Work. Special, full size and performance tests shall be performed as described in the Job Order.

8.5. Job Order Contractor Corrective Work. Job Order Contractor shall, without charge, replace or correct Work found by Owner not to conform to Job Order requirements, unless Owner consents to accept the Work with an appropriate adjustment in Contract price. Job Order Contractor shall promptly segregate and remove rejected material from the premises.

8.6. Failure to Replace or Correct Work. If Job Order Contractor does not promptly replace or correct rejected Work, Owner may:

8.6.1. By Contract or otherwise, replace or correct the Work and charge the cost to Job Order Contractor; or

8.6.2. Terminate for default Job Order Contractor's right to proceed.

8.7. Owner Inspection before Acceptance. If, before acceptance of the entire Work, Owner decides to examine already completed Work by removing it or tearing it out, Job Order Contractor, on request, shall promptly furnish all necessary facilities, labor, and material. If the Work is found to be defective or nonconforming in any material respect due to the fault of Job Order Contractor or its subcontractors, Job Order Contractor shall bear the expenses of the examination and of satisfactory reconstruction. However, if the Work is found to meet requirements, Owner shall make an equitable adjustment for the additional services involved in the examination and reconstruction, including, if completion of the Work was thereby delayed, an extension of the period of time for performance.

8.8. Owner Acceptance. Unless otherwise specified in the Job Order, Owner shall accept, as promptly as practicable after completion and inspection, all work required by the Job Order or that portion of the Work that the Owner determines can be accepted separately. Acceptance shall be final and conclusive except for latent defects, fraud, gross mistakes amounting to fraud, or Owner's rights under any warranty or guarantee.

9. INVOICING AND PAYMENT

9.1. Compensation. As full consideration for the satisfactory performance by Job Order Contractor of Work prescribed under the Contract, Owner shall pay Job Order Contractor the amounts specified in the individual Job Orders.

9.2. Invoices. Job Order Contractor shall submit invoices to the following address:

Pine-Strawberry Water Improvement District
P.O. Box 134
Pine, AZ 85544
Atten: Cato Esquivel, Jr., District Manager

9.3. Job Order Cost Proposal Structure. For each Job Order, the Job Order Contractor shall prepare a Job Order Cost Proposal with the sufficient level of cost detail as required by the Owner. Cost detail may include, but is not limited to: schedule of values, work schedule, direct labor cost and fringe benefits, direct material costs (supported by quotes), direct equipment costs (supported by quotes), cost of subcontractors (supported by quotes) and allowable indirect costs (includes insurance). The contractor shall utilize the markups established in the JOC Pricing Matrix (***Exhibit C***) to calculate the overhead and profit for all Job Order Cost Proposals, unless otherwise requested by the Owner. Profit on subcontractors/subconsultants shall not exceed 5 percent.

9.4. Progress Payments. Owner shall make progress payments monthly as the Work proceeds, or at more frequent intervals as determined by Owner, on estimates of Work completed submitted by the Job Order Contractor and approved by Owner. Job Order Contractor shall use an acceptable invoice form and shall include supporting documents to reflect a breakdown of the total price showing the amount included therein for each principal category of the Work, in such detail as requested, to provide a basis for determining progress payments. In the estimation of Work completed, Owner will authorize payment for material delivered on the site and preparatory work done if Job Order Contractor furnishes satisfactory evidence that it has acquired title to such material and that the material will be used to perform the Work.

9.5. Retention. Shall be determined on a Case by Case basis and defined and agreed to for each individual Job Order.

9.6. Owner's Property. All material and work covered by progress payments made shall, at the time of payment, become the sole property of Owner, but this provision shall not be construed as:

9.6.1. Relieving Job Order Contractor from the sole responsibility for all material and Work upon which payments have been made or the restoration of any damaged Work prior to final acceptance of the Job Order by the Owner; or

9.6.2. Waiving the right of Owner to require the fulfillment of all of the terms of the Contract.

9.7. Approval and Certification. An estimate of the Work submitted shall be deemed approved and certified for payment after seven days from the date of submission unless before that time the Owner or Owner's agent prepares and issues a specific written finding setting forth those items in detail in the estimate of the Work that are not approved for payment under this contract. The Owner may withhold an amount from the progress payment sufficient to pay the expenses the Owner reasonably expects to incur in correcting the deficiency set forth in the written finding. The progress payments shall be paid on or before fourteen days after the estimate of the Work is certified and approved. The estimate of the Work shall be deemed received by the Owner on submission to any person designated by the Owner for the submission, review or approval of the estimate of the Work.

9.8. Unpaid Amounts. Owner shall pay all unpaid amounts due Job Order Contractor under this Contract within thirty (30) days, after:

9.8.1. Completion and acceptance of the Work;

9.8.2. Presentation of a properly executed invoice and supporting documentation;

9.8.3. Presentation of release of all claims against Owner arising by virtue of the Contract, other than claims, in stated amounts, that Job Order Contractor has specifically accepted from the operation of the release. A release may also be required of the assignee if Job Order Contractor's claim to amounts payable under this Contract has been assigned. Job Order Contractor shall complete a Job Order Contractor's release form acceptable to Owner; or

9.8.4. Consent of Job Order Contractor's surety, if any.

10. CHANGES

10.1. Owner Changes. Owner may, at any time, without notice to the sureties, if any, by written order designated or indicated to be a change order, make changes in the Work within the general scope of the Job Orders, including changes:

10.1.1. In the specifications (including drawings and designs);

10.1.2. In Owner-furnished facilities, equipment, materials, services, or site; or

10.1.3. Directing acceleration in the performance of the Work, or otherwise altering the schedule for performance of the Work.

10.2. Owner Change Orders. Any other written order (which, as used in this paragraph, includes direction, instruction, interpretation, or determination) from Owner that causes a change shall be treated as a change order under this ***Article 10***; provided, that Job Order Contractor gives Owner timely written notice stating the date, circumstances, and source of the order and that Job Order Contractor regards the order as a change order.

10.3. Contract Adjustments. Except as provided in this ***Article 10***, no order, statement, or conduct of Owner shall be treated as a change under this ***Article 10*** or entitle Job Order Contractor to an equitable adjustment hereunder.

10.4. Modification of the Job Order. If any change under this ***Article 10*** causes an increase or decrease in Job Order Contractor's cost of, or the time required for, the performance of any part of the Work under a Job Order, whether or not changed by any such order, Owner shall negotiate an equitable adjustment and modify the Job Order in writing.

10.5. Job Order Contractor Proposal. Job Order Contractor must submit any proposal under this ***Article 10*** within thirty (30) calendar days after:

10.5.1. Receipt of a written change order under ***Article 10.1*** above; or

10.5.2. The furnishing of a written notice under ***Article 10.2*** above by submitting to Owner a written statement describing the general nature and amount of the proposal, unless this period is extended by Owner. The statement of proposal for adjustment may be included in the notice under ***Article 10.2*** above.

10.6. Final Payment Limitation. No proposal by Job Order Contractor for an equitable adjustment shall be allowed if asserted after final payment under the Job Order.

10.7. Job Order Contractor Extension Justification. Job Order Contractor shall furnish to the Owner a written proposal for any proposed extension in the period of performance. The proposal shall contain a price breakdown and period of performance extension justification.

10.8. Job Order Contractor Price Breakdown Structure. Job Order Contractor, in connection with any proposal it makes for a Job Order change shall furnish a price breakdown itemized as required by Owner and the pricing matrix as required in the awarded contract.

11. INSURANCE & BONDS

11.1. Job Order Contractor Insurance. Job Order Contractor shall purchase and maintain in effect during the term of this Contract insurance of the types and with minimum limits of liability as stated below. Such insurance shall protect Job Order Contractor and Owner from claims which may arise out of or result from Job Order Contractor's operations whether such operations are performed by Job Order Contractor or by any subcontractor or by anyone for whose acts any of them may be liable.

11.1.1. WORKERS' COMPENSATION INSURANCE providing statutory benefits in accordance with the laws of the State of Arizona or any Federal statutes as may be applicable to the Work being performed under this Contract.

11.1.2. EMPLOYER'S LIABILITY INSURANCE with limits of liability not less than: $1,000,000 Each Accident; $1,000,000 Each Employee for Disease; and $1,000,000 Policy Limit for Disease.

11.1.3. COMMERCIAL GENERAL LIABILITY INSURANCE including Products/Completed Operations and Contractual Liability with limits of liability not less than: $2,000,000 General Aggregate; $2,000,000 Products/Completed Operations Aggregate; and $2,000,000 Each Occurrence.

11.1.4. AUTOMOBILE LIABILITY INSURANCE covering all owned, hired and non-owned motor vehicles used in connection with the Work being performed under this Contract with limits of liability not less than: $1,000,000 Each Person for Bodily Injury; $1,000,000 Each Accident for Bodily Injury; and $1,000,000 Each Occurrence for Property Damage.

11.2. Owner as Additional Insured. The policies providing Commercial General Liability and Automobile Liability insurance as required in ***Article 11.1*** shall be endorsed to name Owner as Additional Insured. Such insurance as is provided herein shall be primary and non-contributing with any other valid and collectible insurance available to Owner.

11.3. Policy Endorsement. All policies providing Job Order Contractor's insurance as required in ***§ 11.1*** above shall be endorsed to provide the following:

11.3.1. Thirty days written notice of cancellation or non-renewal given to Owner at the address designated in ***Article 16.2***.

11.3.2. Waiver of subrogation in favor of Owner.

11.4. Limits of Liability. The limits of liability as required above may be provided by a single policy of insurance or by a combination of primary, excess or umbrella policies. But in no event shall the total limits of liability available for any one occurrence or accident be less than the amount required above.

11.5. Certificate of Insurance. Proof of compliance with these insurance requirements shall be furnished Owner in the form of an original certificate of insurance signed by an authorized

representative or agent of the insurance company(ies) within ten (10) days of execution of this agreement. Renewal or replacement certificates shall be furnished Owner not less than twenty-one (21) days prior to the expiration or termination date of the applicable policy(ies).

11.6. Subcontractor Insurance. Job Order Contractor shall require any and all subcontractors performing Work under this Contract to carry insurance of the types and with limits of liability as Job Order Contractor shall deem appropriate and adequate for the Work being performed. Job Order Contractor shall obtain and make available for inspection by Owner upon request current certificates of insurance evidencing insurance coverages carried by such subcontractors.

11.7. Bonds. If required by Owner, Job Order Contractor shall furnish Performance and Payment Bonds, each in an amount equal to one hundred percent (100%) of the Construction Work, (excluding design and pre-construction services) in a penal sum equal to the aggregate price of all Job Orders issued to the Job Order Contractor. The Performance and Payment Bonds must be submitted to Owner within ten (10) calendar days after issuance of a Job Order.

11.8. Notice to Proceed. Notice to Proceed will not be issued until properly executed bonds and insurance documentation are received and accepted by Owner. A separate Notice to Proceed will be issued for each Job Order. The Notice to Proceed shall stipulate the actual contract start date, the contract duration and the contract completion date. The time required for the Contractor to obtain permits, licenses and easements shall be included in the contract duration and shall not be justification for a delay claim by the Contractor. The time required for the Contractor to prepare, transmit and obtain approval of applicable submittals shall be included in the contract duration and shall not be justification for a delay claim by the Contractor. No work shall be started until after all required permits, licenses, and easements have been obtained. No work shall be started until all applicable submittals have been submitted and returned approved by the Owner's Representative. The Contractor shall notify the Owner's Representative at least seventy-two (72) hours before the following events:

11.8.1. The start of construction in order to arrange for inspection.

11.8.2. Shutdown of PSWID water, drainage, and traffic control facility.

11.8.3. Shutdown of existing water wells, booster pumps, waterlines, and water tanks as well as other facilities associated with the OWNER public water system. All Shutdowns must have prior approval of the OWNER. Shutdown shall not exceed eight (8) hours for any installation. Only one facility may be shutdown at any time.

11.8.4. Coordination is required for all draining and filling of water facilities and all operations of existing valves or gauges with the Owner's Representative.

11.8.5. Start-up or testing of any water well or booster pump to be connected to any part of the existing PSWID water system is required. This includes operation of existing valves necessary to accommodate the work.

12. INDEMNIFICATION. To the fullest extent permitted by law, the Job Order Contractor, subcontractor or design professional shall indemnify and hold harmless the Owner, and its officers and employees, from liabilities, damages, losses and costs, including reasonable attorney fees and court costs, but only to the extent caused by the negligence, recklessness or intentional wrongful conduct of such Job Order Contractor, subcontractor or design professional or other persons employed or used by such Job Order Contractor, subcontractor or design professional in the performance of the contract or subcontract. The amount and type of insurance coverage

requirements set forth herein will in no way be construed as limiting the scope of the indemnity in this paragraph.

13. DISPUTES.

13.1. Party Cooperation. The parties are fully committed to working with each other throughout the term of the Contract and agree to communicate regularly with each other at all times so as to avoid or minimize disputes or disagreements. If disputes or disagreements do arise, Job Order Contractor and Owner each commit to resolving such disputes or disagreements in an amicable, professional and expeditious manner so as to avoid unnecessary losses, delays and disruptions to the Work.

13.2. Field Level Resolution. Job Order Contractor and Owner will first attempt to resolve disputes or disagreements at the field level through discussions between the parties' representatives named herein.

13.3. Job Order Contractor Performance. The Job Order Contractor shall continue to perform the Work and Owner shall continue to satisfy its payment obligations to Job Order Contractor, pending the final resolution of any dispute or disagreements between the parties.

13.4. Partnering. If requested and mutually agreed upon, the Owner and Job Order Contractor will share in the expense of an initial facilitated partnering workshop, followed up by periodic refresher meetings at mutually agreed times. The goal of the workshop will be to identify common goals, common interests, lines of communication, and a commitment to cooperative problem solving.

13.5. Owner's Representative. Owner designates the individual listed below as its representative, which individual has the authority and responsibility for avoiding and resolving disputes under this Contract. (Identify individual's name, title, address and telephone numbers)

Pine-Strawberry Water Improvement District
Cato Esquivel, Jr., District Manager
6306 W. Hardscrabble
Pine, AZ 85544
(928) 476-4222

13.6. Job Order Contractor's Representative. Job Order Contractor designates the individual listed below as its representative, which individual has the authority and responsibility for avoiding and resolving disputes under this Contract. (Identify individual's name, title, address and telephone numbers)

Apache Underground & Excavating
Mark Gardner
P.O. Box 113
Lakeside, AZ 85929
(928) 242-1055

13.7. Owner's Resolution. Any dispute which is not disposed of by agreement will be decided by the Owner, who will reduce its decision to writing and mail or otherwise furnish a copy thereof to the Job Order Contractor. Any dispute not finally resolved under this ***Article 13*** may be brought before the state courts of the State of Arizona and adjudicated in accordance with the laws of Arizona.

14. TERMINATION AND DEFAULT

14.1. Termination for Convenience. Owner may terminate performance of the Work under this Contract in whole or, from time to time, in part if Owner determines that termination is in Owner's interest. Owner shall effect such termination by delivering to Job Order Contractor a Notice of Termination specifying the extent of termination and the effective date.

14.2. Notice of Termination. After receipt of a Notice of Termination, and except as directed by Owner, Job Order Contractor shall immediately proceed with the following obligations, regardless of any delay in determining or adjusting any amounts due under this ***Article 14***:

14.2.1. Stop work as specified in the notice;

14.2.2. Place no further subcontracts or orders (referred to as subcontracts in this ***Article 14***) for materials, services or facilities, except as necessary to complete any Work not terminated;

14.2.3. Assign to Owner, if directed by Owner, all right, title, and interest of Job Order Contractor under the subcontracts to the extent they relate to the Work terminated, in which case Owner shall have the right to settle or to pay any termination settlement proposal arising out of those terminations, or with approval or ratification to the extent required by Owner, settle all outstanding liabilities and termination settlement proposals arising from the termination of subcontracts, the approval or ratification of which will be final for purposes of this ***Article 14***;

14.2.4. As directed by Owner, transfer title and deliver to Owner:

14.2.4.1. The fabricated or unfabricated parts, Work in progress, completed Work, supplies, and other material produced or acquired for the Work terminated;

14.2.4.2. The completed or partially completed plans, drawings, information, and other property that, if the Contract had been completed, would be required to be furnished to Owner;

14.2.5. Complete performance of the Work not terminated;

14.2.6. Take any action that may be necessary, or that Owner may direct, for the protection and preservation of the property related to this Contract that is in the possession of Job Order Contractor and in which Owner has or may acquire an interest; and

14.2.7. Use its best efforts to sell, as directed or authorized by Owner, any property of the types referred to in ***Article 14.2.3*** above; provided, however, that Job Order Contractor is not required to extend credit to any purchaser and may acquire the property under the conditions prescribed by, and at prices approved by, Owner. The proceeds of any transfer or disposition will be applied to reduce any payments to be made by Owner under the Contract, credited to the price or cost of the Work, or paid in any other manner directed by Owner.

14.3. Final Termination Settlement Proposal. After termination, Job Order Contractor shall submit a final termination settlement proposal to Owner in the form and with the certification prescribed by Owner. Job Order Contractor shall submit the proposal promptly, but no later than one year from the effective date of termination.

14.4. Owner Payment. Job Order Contractor and Owner may agree upon the whole or any part of the amount to be paid because of the termination. The amount will include a reasonable allowance for profit on work done. The Contract shall be amended, and Job Order Contractor paid the agreed amount.

14.4.1. If Job Order Contractor and Owner fail to agree on the whole amount to be paid Job Order Contractor because of the termination of work, Owner shall pay Job Order Contractor the amounts determined as follows, but without duplication of any amounts agreed upon under ***Article 14.4*** above:

14.4.1.1. For Work performed before the effective date of termination, the total (without duplication of any items) of:

14.4.1.1.1. The cost of this Work;

14.4.1.1.2. The cost of settling and paying termination settlement proposals under terminated subcontracts that are properly chargeable to the terminated portion of the Contract if not included in ***Article 14.4.1.1.1.*** above; and

14.4.1.1.3. A markup, including overhead and profit, on ***Article 14.4.1.1.1.*** above as is determined for pricing changes.

14.4.1.2. The reasonable costs of settlement of the Work terminated, including:

14.4.1.2.1. Accounting, legal, clerical, and other expenses reasonably necessary for the preparation of termination settlement proposals and supporting data;

14.4.1.2.2. The termination and settlement of subcontracts (excluding the amounts of such settlements); and

14.4.1.2.3. Storage, transportation, and other costs incurred, reasonably necessary for the preservation, protection, or disposition of the termination inventory.

14.5. Destroyed, Lost, Stolen or Damaged Property. Except for normal spoilage, and except to the extent that Owner expressly assumed the risk of loss, Owner shall exclude from the amounts payable to Job Order Contractor under ***Article 14.4.1*** above, the fair value, as determined by Owner, of property that is destroyed, lost, stolen, or damaged so as to become undeliverable to Owner or to a buyer.

14.6. Amount Due Job Order Contractor. In arriving at the amount due Job Order Contractor under this ***Article 14***, there shall be deducted:

14.6.1. All unliquidated advances or other payments to Job Order Contractor under the terminated portion of the Job Order;

14.6.2. Any claim which Owner has against Job Order Contractor under the Contract; and

14.6.3. The agreed price for, or the proceeds of sale of, materials, supplies, or other things acquired by Job Order Contractor or sold under the provisions of this ***Article 14*** and not recovered by or credited to Owner.

14.7. Partial Termination. If the termination is partial, Job Order Contractor may file a proposal with Owner for an equitable adjustment of the price(s) of the continued portion of any Job Order. Any proposal by Job Order Contractor for an equitable adjustment under this ***Article 14*** shall be requested within ninety (90) calendar days from the effective date of termination unless extended in writing by Owner. Owner may, under the terms and conditions it prescribes, make partial payments and payments against costs incurred by Job Order Contractor of the terminated portion of any Job Order, if Owner believes the total of these payments will not exceed the amount to which Job Order Contractor will be entitled.

14.8. Excess Payments. If the total payments exceed the amount finally determined to be due, Job Order Contractor shall repay the excess to Owner upon demand.

14.9. Job Order Contractor Records. Unless otherwise provided in this Contract or by statute, Job Order Contractor shall maintain all records and documents relating to the terminated portion of this Contract for three (3) years after final settlement. This includes all books and other evidence bearing on Job Order Contractor's costs and expenses under this Contract. Job Order Contractor shall make these records and documents available to Owner, at Job Order Contractor's office, at all reasonable times, without cost. If approved by Owner, photographs, microphotographs, or other authentic reproductions may be maintained instead of original records and documents.

14.10. Default. If Job Order Contractor refuses or fails to prosecute the Work, or any separable part, with the diligence that will ensure its completion within the time specified in the Job Order including any extension, or fails to complete the Work within this time, Owner may terminate the Job Order Contractor's right to proceed with the Work (or separable part of the Work), upon thirty (30) days written notice to the Job Order Contractor. In this event, Owner may take over the Work and complete it by Contract or otherwise and may take possession of and use any materials, appliances, and plant on the site necessary for completing the Work.

14.11. Job Order Contractor's Right to Proceed. Job Order Contractor's right to proceed shall not be terminated under this ***Article 14***, if:

14.11.1. The delay in completing the Work arises from unforeseeable causes beyond the control and without the fault or negligence of Job Order Contractor. Examples of such causes include: acts of God or of the public enemy, acts of Owner in its Contractual capacity, acts of another contractor in the performance of a Contract with Owner, fires, floods, epidemics, quarantine restrictions, strikes, freight embargoes, unusually severe weather (The basis used to define normal weather will be data showing high and low temperatures, precipitation, and number of days of severe weather in the city closest to the site for the previous ten (10) years, as compiled by the United States Department of Commerce National Weather Service.), or delays of subcontractors or suppliers at any tier arising from unforeseeable causes beyond the control and without the fault or negligence of both Job Order Contractor and the subcontractors or suppliers; and

14.11.2. Job Order Contractor, within 30 calendar days from the beginning of any such delay (unless extended by Owner), notifies Owner in writing of the causes of delay. The Owner shall ascertain the facts and the extent of delay. If, in the judgment of Owner, the findings of fact warrant such action, the time for completing the Work shall be extended. The findings of Owner shall be final and conclusive on the parties, but subject to appeal and review under ***Article 13***.

14.12. Owner's Right to Terminate. The rights and remedies of Owner in this ***Article 14*** are in addition to any other rights and remedies provided by law or under this Contract.

14.13. Owner and Job Order Contractor Rights. If, after termination of Job Order Contractor's right to proceed, it is determined that Job Order Contractor was not in default, or that the delay was excusable, the rights and obligations of the parties will be the same as if the termination had been issued for the convenience of Owner.

14.14. Liquidated Damages. Liquidated Damages shall be in the sum per calendar day shown in Table 108-1, in MAG Specification, Section, 108.9 FAILURE TO COMPLETE ON TIME, per day for each calendar day of delay, based upon the total job order value to date (i.e. phased

project awards). If the contract is not terminated, the contractor shall continue performance and be liable to the Owner for the liquidated damages until the products are delivered or services performed. In the event the OWNER exercises its right of termination, the contractor shall be liable to the Owner for any excess costs, and in addition, for liquidated damages until such time the Owner may reasonably obtain delivery or performance of similar supplies or services.

14.15. Immigration Act. Contractor understands and acknowledges the applicability to Contractor of the Immigration Reform and Control Act of 1986 (IRCA). Contractor agrees to comply with the IRCA in performing under this contract and to permit the OWNER inspection of personnel records to verify such compliance.

15. WARRANTY OF CONSTRUCTION

15.1. Applicable Warranties. In addition to any other warranties in any Job Orders, Job Order Contractor warrants, except as provided in ***Article 15.10***, that work performed conforms to the Job Order requirements and is free of any defect in equipment, material or design furnished, or workmanship performed by Job Order Contractor or any of its subcontractors or suppliers at any tier.

15.2. Warranty Duration. This warranty shall continue for a period of one (1) year from the date of final acceptance of the Work. If Owner takes possession of any part of the Work before final acceptance, this warranty shall continue for a period of one (1) year from the date possession is taken.

15.3. Job Order Contractor Corrective Work. Job Order Contractor shall remedy at Job Order Contractor's expense any failure of the Work to conform to the plans and specifications, or any construction defect. In addition, the Job Order Contractor shall remedy at Job Order Contractor's expense any damage to Owner's real or personal property, when that damage is the result of:

15.3.1. Job Order Contractor's failure to conform to requirements; or

15.3.2. Any defect of equipment, material, workmanship, or design furnished by the Job Order Contractor.

15.4. Job Order Contractor Restoration. Job Order Contractor shall restore any work damaged in fulfilling the terms and conditions of this ***Article 15***. Job Order Contractor's warranty with respect to work repaired or replaced will run for one (1) year from the date of repair or replacement.

15.5. Owner Notification. Owner shall notify Job Order Contractor, in writing, within a reasonable time after the discovery of any failure, defect, or damage.

15.6. Failure to Correct Work. If Job Order Contractor fails to remedy any failure, defect, or damage within ten (10) days after receipt of notice, Owner shall have the right to replace, repair, or otherwise remedy the failure, defect or damage at Job Order Contractor's expense.

15.7. Subcontractor and Supplier Warranties. With respect to all warranties, expressed or implied, from subcontractors, manufacturers, or suppliers for work performed and materials furnished for Job Orders issued under this Contract, Job Order Contractor shall:

15.7.1. Obtain all warranties required by the Job Order;

15.7.2. Require all warranties to be executed, in writing, for the benefit of Owner; and

15.7.3. Enforce all warranties for the benefit of Owner.

15.8. Owner Remedy. In the event Job Order Contractor's warranty under ***Article 15.2*** has expired, Owner may bring suit at its expense to enforce a subcontractor's, manufacturer's, or supplier's warranty.

15.9. Owner Furnished Material or Design. Unless a defect is caused by the negligence of Job Order Contractor or subcontractor or supplier at any tier, Job Order Contractor shall not be liable for the repair of any defects of material or design furnished by Owner or for the repair of any damage that results from any defect in Owner-furnished material or design.

15.10. Pre-Existing Work. Job Order Contractor is not responsible for and does not warranty pre-existing work or facilities that may be assigned to Job Order Contractor except as modified by the Job Order.

15.11. Owner's Rights. This warranty shall not limit Owner's rights under ***Article 8*** of this Contract with respect to latent defects, gross mistakes, or fraud.

16. STANDARD TERMS AND CONDITIONS

16.1. Contract Order of Precedence. In the event of an inconsistency between provisions of this Contract, the inconsistency shall be resolved by giving precedence in the following order:

16.1.1. Contract Modifications, if any;

16.1.2. This Contract, including Exhibits;

16.1.3. Job Orders;

16.1.4. Drawings; and

16.1.5. Specifications.

16.2. Certification. By signature in the Offer section of the Offer and Contract Award page the Job Order Contractor certifies:

16.2.1. The submission of the offer did not involve collusion or other anti-competitive practices.

16.2.2. The Job Order Contractor shall not discriminate against any employee or applicant for employment.

16.2.3. The Job Order Contractor has not given, offered to give, nor intends to give at any time hereafter any economic opportunity, future employment, gift, loan, gratuity, special discount, trip favor, or service to a public servant in connection with the submitted offer. Failure to sign the offer, or signing it with a false statement, shall void the submitted offer or any resulting contracts, and the vendor may be debarred.

16.2.4. The Job Order Contractor is licensed to perform the Work pursuant to A.R.S. Title 32, Chapter 10.

16.2.5. The Job Order Contractor does not participate in, and agrees not to participate in during the term of any resultant contract, a boycott of Israel in accordance with A.R.S. §35-393.01

16.3. Bribes and Kick-Backs. The Job Order Contractor shall not by any means:

16.3.1. Induce any person or entity employed in the construction of the Project to give up any part of the compensation to which that person or entity is entitled;

16.3.2. Confer on any governmental, public or quasi-public official having any authority or influence over the Project, any payment, loan subscription, advance, deposit of money, services or anything of value, present or promised;

16.3.3. Offer nor accept any bribes or kick-backs in connection with the Project from or to any individual or entity, including any of its trade contractors, subcontractors, consultants, suppliers or manufacturers of Project goods and materials; or,

16.3.4. Without the express written permission of the Owner, call for or by exclusion require or recommend the use of any subcontractor, consultant, product, material, equipment, system, process or procedure in which the Job Order Contractor has a direct or indirect proprietary or other pecuniary interest.

16.4. Applicable Law. In the performance of this agreement, contractors shall abide by and conform to any and all laws of the United States, State of Arizona and the Owner including but not limited to federal and state executive orders providing for equal employment and procurement opportunities, the Federal Occupational Safety and Health Act and any other federal or state laws applicable to this agreement.

Contractor specifically understands and acknowledges the applicability to it of the Americans with Disabilities Act, including Section 508, the Immigration Reform and Control Act of 1986, and the Drug Free Workplace Act of 1989. In addition, if this agreement pertains to construction, Contractor must also comply with A.R.S. § 34-301, as amended (Employment of Aliens on Public Works Prohibited) and A.R.S. § 34-302, as amended (Residence Requirements for Employees).

Under the provisions of A.R.S. § 41-4401, Contractor hereby warrants to the Owner that Contractor and each of its subcontractors ("Subcontractors") will comply with, and are contractually obligated to comply with, all Federal immigration laws and regulations that relate to their employees and A.R.S. § 23-214(A) (hereinafter, "Contractor Immigration Warranty").

A breach of the Contractor Immigration Warranty shall constitute a material breach of this agreement and shall subject Contractor to penalties up to and including termination of this agreement at the sole discretion of the Owner. The Owner may, at its sole discretion, conduct random verification of the employment records of Contractor and any Subcontractors to ensure compliance with the Contractor Immigration Warranty. Contractor agrees to assist the Owner regarding any random verifications performed.

Neither Contractor nor any Subcontractor shall be deemed to have materially breached the Contractor Immigration Warranty if Contractor or the Subcontractor establishes that it has complied with the employment verification provisions prescribed by §§ 274A and 274B of the Federal Immigration and Nationality Act and the E-Verify requirements prescribed by A.R.S. §23-214(A).

The provisions of this Paragraph must be included in any contract Contractor enters into with any Subcontractors who provide services under this agreement or any subcontract. "Services" is defined as furnishing labor, time or effort in the State of Arizona by a contractor or subcontractor. Services include construction or maintenance of any structure, building or transportation facility or improvement to real property.

Contractor warrants, for the term of this agreement and for six months thereafter, that is has fully complied with the requirements of the Immigration Reform and Control Act of 1986 and all related or similar legal authorities.

This contract shall be governed by the Owner and Contractor shall have all remedies afforded each by the Uniform Commercial Code, as adopted in the State of Arizona, except as otherwise provided in this contract or in statutes pertaining specifically to the Owner. This contract shall be governed by the laws of the State of Arizona and suit pertaining to this contract may be brought only in courts in the State of Arizona.

This contract is subject to the provisions of A. R. S. §38-511; the Owner may cancel this contract without penalty or further obligations by the Owner or any of its departments or agencies if any person significantly involved in initiating, negotiating, securing, drafting or creating the contract on behalf of the Owner or any of its departments or agencies, is at any time while the contract or any extension of the contract is in effect, an employee of any other party to the contract in any capacity or a consultant to any other party of the contract with respect to the subject matter of the contract..

16.4.1. Job Order Contractor warrants, for the term of this agreement and for six months thereafter, that is has fully complied with the requirements of the Immigration Reform and Control Act of 1986 and all related or similar legal authorities.

16.4.2. This contract shall be governed by the Owner. The Owner and Job Order Contractor shall have all remedies afforded each by the Uniform Commercial Code, as adopted in the State of Arizona, except as otherwise provided in this contract or in statutes pertaining specifically to the Owner. This contract shall be governed by the laws of the State of Arizona. Any lawsuit pertaining to this contract may be brought only in courts in the State of Arizona.

16.4.3. This contract is subject to the provisions of A. R. S. § 38-511; the Owner may cancel this contract without penalty or further obligations by the Owner or any of its departments or agencies if any person significantly involved in initiating, negotiating, securing, drafting or creating the contract on behalf of the Owner or any of its departments or agencies, is at any time while the contract or any extension of the contract is in effect, an employee of any other party to the contract in any capacity or a consultant to any other party of the contract with respect to the subject matter of the contract.

16.5. Legal Remedies.: All claims and controversies shall be subject to resolution according to the terms of the Owner's Procurement Code.

16.6. Contract: The contract between the Owner and the Job Order Contractor shall consist of (1) the Solicitation, including instructions, all terms and conditions, specifications, scopes of work, Exhibits, price sheet(s) and any amendments thereto, and (2) the offer submitted by the Job Order Contractor in response to the solicitation. In the event of a conflict in language between the Solicitation and the Offer, the provisions and requirements in the Solicitation shall govern. However, the Owner reserves the right to clarify, in writing, any contractual terms with the concurrence of the Job Order Contractor, and such written contract shall govern in case of conflict with the applicable requirements stated in the Solicitation or the Vendor's offer. The Solicitation shall govern in all other matters not affected by the written contract.

16.7. Contract Amendments: This contract may be modified only by a written Contract Amendment signed by persons duly authorized to enter into contracts on behalf of the Owner and the Job Order Contractor.

16.8. Contract Applicability: The Offeror shall substantially conform to the terms, conditions, specifications and other requirements found within the text of this Solicitation. All previous agreements, contracts, or other documents, which have been executed between the Offeror and the Owner are not applicable to this Solicitation or any resultant contract.

16.9. Severability. The provisions of this contract are severable to the extent that any provision or application held to be invalid shall not affect any other provision or application of the contract which may remain in effect without the invalid provision or application.

16.10. Relationship to Parties. It is clearly understood that each party will act in its individual capacity and not as an agent, employee, partner, joint venture, or associate of the other. An employee or agent of one party shall not be deemed or construed to be the employee or agent of the other for any purpose whatsoever. The Job Order Contractor is advised that taxes or Social Security payments will not be withheld from any payments issued by the Owner hereunder and that the Job Order Contractor should make arrangements to directly pay such expenses, if any.

16.11. No Delegation or Assignment. - Contractor shall not delegate any duty under this Contract, and no right or interest in this Contract shall be assigned by Contractor to any successor entity or third party, including but not limited to an affiliated successor or purchaser of Contractor or its assets, without prior written permission of the Owner. The Owner, at its option, may cancel this Contract in the event Contractor undertakes a delegation or assignment without first obtaining the Owner's written approval. Contractor agrees and acknowledges that it would not be unreasonable for the Owner to decline to approve a delegation or assignment that results in a material change to the services provided under this Contract or an increased cost to the Owner.

16.12. Job Order Contractor/Supplier Contract. The Job Order Contractor shall enter into written contracts with its subcontractor(s) and supplier(s), if any, and those written contracts shall be consistent with this Contract for Construction. It is the intent of the Owner and the Job Order Contractor that the obligations of the Job Order Contractor's subcontractor(s) and supplier(s), if any, inure to the benefit of the Owner and the Job Order Contractor, and that the Owner be a third-party beneficiary of the Job Order Contractor's agreements with its subcontractor(s) and supplier(s).

16.12.1. The Job Order Contractor shall make available to each subcontractor and supplier, if any, prior to the execution of written contracts with any of them, a copy of the pertinent portions of this Contract for Construction, including those portions of the Construction documents to which the subcontractor or supplier will be bound, and shall require that each subcontractor and supplier shall similarly make copies of applicable parts of such documents available to its respective subcontractor(s) and supplier(s).

16.12.2. The Job Order Contractor shall engage each of its subcontractor(s) and supplier(s) with written contracts which preserve and protect the rights of the Owner and include the acknowledgment and agreement of each subcontractor or supplier that the Owner is a third-party beneficiary of the contract. The Job Order Contractor's agreements with its subcontractor(s) and supplier(s) shall require that in the event of default under, or termination of, this Contract for Construction, and upon request of the Owner, the Job Order Contractor's subcontractor(s) and supplier(s) will perform services for the Owner.

16.12.3. The Job Order Contractor shall include in its agreements with its subcontractor(s) and supplier(s) a provision which contains the acknowledgment and agreement of the subcontractor or supplier that it has received and reviewed the applicable terms, conditions and

requirements of this Contract for Construction that are included by reference in its written contract with the Job Order Contractor, and that it will abide by those terms, conditions and requirements.

16.13. Rights and Remedies. No provision in this document or in the vendor's offer shall be construed, expressly or by implication, as waiver by the Owner of any existing or future right and/or remedy available by law in the event of any claim of default or breach of contract. The failure of the Owner to insist upon the strict performance of any term or condition of the contract or to exercise or delay the exercise of any right or remedy provided in the contract, or by law, or the Owner's acceptance of and payment for materials or services, shall not release the Job Order Contractor from any responsibilities or obligations imposed by this contract or by law, and shall not be deemed a waiver of any right of the Owner to insist upon the strict performance of the Contract.

16.14. Overcharges By Antitrust Violations. The Owner maintains that, in practice, overcharges resulting from antitrust violations are borne by the purchaser. Therefore, to the extent permitted by law, the Job Order Contractor hereby assigns to the Owner any and all claims for such overcharges as to the goods and services used to fulfill the Contract.

16.15. Force Majeure. Except for payment for sums due, neither party shall be liable to the other nor deemed in default under this Contract if and to the extent that such party's performance of this Contract is prevented by reason of force Majeure.

16.15.1. The term *"force majeure"* means an occurrence that is beyond the control of the party affected and occurs without its fault or negligence. Without limiting the foregoing, force majeure includes acts of God: acts of the public enemy; war; riots; strikes; mobilization; labor disputes; civil disorders; fire; floods; lockouts, injunctions-intervention-acts, or failures or refusals to act by government authority; and other similar occurrences beyond the control of the party declaring force majeure which such party is unable to prevent by exercising reasonable diligence. The force majeure shall be deemed to commence when the party declaring force majeure notifies the other party of the existence of the force majeure and shall be deemed to continue as long as the results or effects of the force majeure prevent the party from resuming performance in accordance with this Contract.

16.15.2. Force majeure shall not include the following occurrences: late delivery of equipment or materials caused by congestion at a manufacturer's plant or elsewhere, an oversold condition of the market, inefficiencies, or similar occurrences; late performance by a subcontractor unless the delay arises out of a force majeure occurrence in accordance with this Force Majeure term and Condition; or any delay or failure in performance by either party hereto shall not constitute default hereunder or give rise to any claim for damages or loss of anticipated profits if, and to the extent that such delay or failure is caused by force majeure. If either party is delayed at any time in the progress of the work by force majeure, then the delayed party shall notify the other party in writing of such delay within forty-eight (48) hours commencement thereof and shall specify the causes of such delay in such notice. Such notice shall be hand delivered or mailed *Certified-Return Receipt* and shall make a specific reference to this article, thereby invoking its provisions. The delayed party shall cause such delay to cease as soon as practicable and shall notify the other party in writing. The time of completion shall be extended by contract modification for a period of time equal to the time that the results or effects of such delay prevent the delayed party from performing in accordance with this contract.

16.16. Right To Assurance. Whenever one party to this contract in good faith has reason to question the other party's intent to perform he may demand that the other party give a written

assurance of this intent to perform. In the event that a demand is made and no written assurance is given within five (5) days, the demanding party may treat this failure as an anticipatory repudiation of the Contract.

16.17. Right To Audit Records. The Owner may, at reasonable times and places, audit the books and records of any Contractor as related to any contract held with the Owner. This right to audit also empowers the OWNER to inspect the papers of any Contractor or Subcontractor employee who works on this contract to ensure that the Contractor or Subcontractor is complying with the Contractor Immigration Warranty made pursuant to ***Article 16.4*** above.

16.18. Warranties. Job Order Contractor warrants that all material, service or construction delivered under this contract shall conform to the specifications of this contract. Unless otherwise stated in Job Order Contractor's response, the Owner is responsible for selecting items, their use, and the results obtained from any other items used with the items furnished under this contract. Mere receipt of shipment of the material/service specified and any inspection incidental thereto by the Owner shall not alter or affect the obligations of the Job Order Contractor or the rights of the Owner under the foregoing warranties. Additional warranty requirements may be set forth in the solicitation.

16.19. Inspection. All material and/or services are subject to inspection and acceptance by the Owner. Materials and/or services failing to conform to the specifications of this Contract will be held at Job Order Contractor's risk and may be returned to the Job Order Contractor. If so returned, all costs are the responsibility of the Job Order Contractor. The Owner may elect to do any or all of the following:

16.19.1. Waive the non-conformance.

16.19.2. Stop the work immediately.

16.19.3. Bring material into compliance.

16.19.4. This shall be accomplished by a written determination from the Owner.

16.20. Title and Risk of Loss. The title and risk of loss of material and/or service shall not pass to the Owner until the Owner actually receives the material or service at the point of delivery, unless otherwise provided within this Contract.

16.21. No Replacement of Defective Tender. Every tender of materials shall fully comply with all provisions of the Contract. If a tender is made which does not fully conform, this shall constitute a breach of the Contract as a whole.

16.22. Shipment Under Reservation Prohibited. Job Order Contractor is not authorized to ship materials under reservation and no tender of a bill of lading will operate as a tender of the materials.

16.23. Liens. All materials, service or construction shall be free of all liens, and if the Owner requests, a formal release of all liens shall be delivered to the Owner.

16.24. Licenses. shall maintain in current status, all Federal, State and Local licenses and created under this contract are the property of the Owner and shall not be used or released by the Job Order Contractor or any other person except with the prior written permission of the Owner.

16.25. Patents and Copyrights. All services, information, computer program elements, reports and other deliverables, which may be patented or copyrighted and created under this contract

are the property of the Owner and shall not be used or released by the Job Order Contractor or any other person except with the prior written permission of the Owner.

16.26. Cost of Bid/Proposal Preparation. The Owner shall not reimburse the cost of developing presenting or providing any response to this solicitation. Offers submitted for consideration should be prepared simply and economically, providing adequate information in a straightforward and concise manner.

16.27. Public Records. All offers submitted in response to this solicitation shall become the property of the OWNER and shall become a matter of public record available for review, subsequent to the award notification, in accordance with the Owner's Procurement Code. However, subsequent to the award of the contract, any information and documents obtained by the Owner during the course of an audit conducted in accordance with ***Article 16.17*** above for the purpose of determining compliance by Contractor or a Subcontractor with the Contractor Immigration Warranty mandated by Paragraph 16.4 above shall remain confidential and shall not be made available for public review or produced in response to a public records request, unless the OWNER is ordered or otherwise directed to do so by a court of competent jurisdiction.

16.28. Advertising. Job Order Contractor shall not advertise or publish information concerning this Contract, without prior written consent of the Owner.

16.29. Delivery Orders. The Owner shall issue a Purchase Order for the material and/or services covered by this contract. All such documents shall reference the contract number as indicated on the signature page of the contract

16.30. Funding. Any contract entered into by the Owner is subject to funding availability. Fiscal years for the Owner are July 1 to June 30. The Owner Council approves all budget requests. If a specific funding request is not approved, the contract shall be terminated.

16.31. Federal Funding. It is the responsibility of the Contractor to determine on any single job order project if federal wage rates will apply. It is also the responsibility of the Contractor to incorporate any necessary amounts in the bid to accommodate for required federal record keeping and necessary pay structures. The Contractor should contact the Owner regarding any applicable Davis Bacon wage rates.

16.31.1 Davis-Bacon Act - (40 U.S.C. §276a-276a-5). All contracts or subsequent subcontracts for construction, alteration, renovation, or repair, including painting and decorating, of a public building or public work, or building or work, financed by federal funds which meets the $2,000 threshold are required to pay the federal prevailing wage rate for each class of laborer or mechanic employed. Regulations applicable to grant-enabling statutes incorporating the Act can be found in 29 Code of Federal Regulations (CFR), Parts 1,3,5 and 7. These regulations stipulate that grant funds appropriated under statutes imposing the Davis-Bacon Act requirements shall not be paid to a grantee (the Department) until contractors or subcontractors performing work under the grant certify that they will comply with the Act's requirements. The Act also applies to any contract or subcontract for similar work on public grants from a federal agency, or where the federal government acts as guarantors of mortgages. The only exception is for the transportation of materials and supplies by persons who are not employed directly at the work site, but are employed solely to make deliveries to the work site.

Provider Agencies must ensure that contracts or subcontracts for any construction/alteration projects contain the wage determinations issued and that the appropriate clauses required by the Davis-Bacon regulations (29 CFR, section 5.5) are present. It should be made clear in any

announcements of projects or RFPs that federal grant funds are being used and that Davis-Bacon will apply even if the federal government is not a party to the contract or subcontract. The prevailing wage must be paid regardless of any contractual relationship that may exist between a contractor or a subcontractor. Although the Department is not responsible to review sub-contracts for compliance, it has the right to require a prevailing wage.

Sanctions for post-certification violations include suspension of payment, advances, or guarantees of grant funds, and the forced restitution of wages that should have been paid and the removal of offending contractors or subcontractors from active employment lists.

Failure to comply can bring penalties that can be severe. The contractor or subcontractor and their sureties are liable for any excess costs for completing the work; the Department may withhold accruals to ensure payment of prevailing wages to the workers; the contract or subcontract may be terminated and/or the contractor or subcontractor may be debarred for a period of three years.

16.32. A.R.S. Title 34 Provisions.

16.32.1. The maximum dollar amount of an individual job order shall be One Million Dollars ($1,000,000) or such higher or lower amount prescribed by the Owner in an action notice pursuant to A.R.S. title 38, chapter 3, article 3.1 or a rule adopted by the Owner as the maximum amount of an individual job order. Requirements shall not be artificially divided or fragmented in order to constitute a job order that satisfies this requirement.

16.32.2. If the Job Order Contractor subcontracts or intends to subcontract part or all of the work under a job order and if this contract includes descriptions of standard individual tasks, standard unit prices for standard individual tasks and pricing of job orders based on the number of units of standard individual tasks in the job order, then:

16.32.2.1. The Job Order Contractor has a duty to deliver promptly to each subcontractor invited to bid a coefficient to the Job Order Contractor to do all or part of the work under one or more job orders:

16.32.2.1.1. A copy of the descriptions of all standard individual tasks on which the subcontractor is invited to bid.

16.32.2.1.2. A copy of the standard unit prices for the individual tasks on which the subcontractor is invited to bid.

16.32.2.2. If not previously delivered to the subcontractor, the Job Order Contractor has a duty to deliver promptly the following to each subcontractor invited to or that has agreed to do any of the work included in any job order:

16.32.2.2.1. A copy of the description of each standard individual task that is included in the job order and that the subcontractor is invited to perform.

16.32.2.2.2. The number of units of each standard individual task that is included in the job order and that the subcontractor is invited to perform.

16.32.2.2.3. The standard unit price for each standard individual task that is included in the job order and that the subcontractor is invited to perform.

16.32.3. The Owner will include the full street or physical address of each separate location at which the construction will be performed for each individual Job Order. The Job Order Contractor (and on behalf of each subcontractor at any level) hereby agrees to include in each of

its subcontracts the same address information. The Job Order Contractor and each subcontractor at any level shall include in each subcontract the full street or physical address of each separate location at which construction work will be performed.

16.33 Prohibited Lobbying Activities. The Offeror, his/her agent or representative shall not contact, orally or in any written form any of the Owner's elected official or any of the Owner's employee other than the Owner's District Manager or Attorney (for legal issues only) regarding the contents of this solicitation or the solicitation process commencing from receipt of a copy of this request for proposals and ending upon submission of a staff report for placement on the Owner's Board agenda. The Owner's District Manager shall disqualify an Offeror's proposal for violation of this provision. This provision shall not prohibit an Offeror from petitioning an elected official after submission of a staff report for placement on the Owner's Board agenda or engaging in any other protected first amendment activity after submission of a staff report for placement on the Owner's Board agenda.

16.34 Prohibited Political Contributions. Consultant during the term of this Agreement shall not make a contribution reportable under Title 16, Chapter 6, Article 1, Arizona Revised Statutes to a candidate or candidate committee for any of the Owner's elective office during the term of this Agreement. The Owner reserves the right to terminate the Agreement without penalty for any violation of this provision.

EXHIBITS

Exhibit A	JOC General Scope of Services
Exhibit B	RSOQ & Contractor's Response
Exhibit C	JOC Cost Proposal Forms (Pricing Matrix, Project Cost Sheet)
Exhibit D	Contractor's Contacts (Contact List & Authorized Signature Form)

EXHIBIT A
JOC General Scope of Services

1.0 GENERAL INFORMATION

1.1 This is a fixed price, indefinite quantity type Contract for the performance of various [identify the type of projects permitted under this JOC (needs to align with scope of work outlined in original RSOQ)] on an as-needed basis as may be required by Owner. The specific work requirements will be identified in Job Orders to be issued by Owner.

1.2 Depending on what is required by the Individual Job Order Agreement, the type of Contract will be either "Lump Sum Fixed Price" or "Guaranteed Maximum Price (with savings returned to owner)".

2.0 DOCUMENTS

2.1 The currently applicable pricing structure contains pricing information for the Work to be accomplished in the pricing matrix specified. The Pricing matrix can only be updated at time of yearly contract renewal by mutually agreeable change order. Previously issued Job Orders and changes will not be retroactively re-priced although any changes priced after receipt of an update will be priced by the updated version of the new pricing matrix.

2.2 The construction specifications in effect at Contract signing, and provided to the Job Order Contractor, shall be the specifications under this Contract.

3.0 WORK AUTHORIZATION

Any Work required under this Contract shall be authorized by issuance of formal, written Job Orders, as follows:

3.1 As the need exists (as determined by Owner) for performance under the terms of this Contract, Owner will notify Job Order Contractor of an existing requirement.

3.2 Upon the receipt of this notification, Job Order Contractor shall respond within two (2) working days, or as otherwise agreed, by:

3.2.1 Visiting the proposed site in the company of Owner, or;

3.2.2 Establishing contact with Owner to further define the scope of the requirement.

3.3 After mutual agreement on the scope of the individual requirement, Job Order Contractor shall then prepare a proposal for accomplishment of the task unless Job Order Contractor, in its sole discretion, elects not to undertake the Work. If the Work is declined, Job Order Contractor will so notify Owner in a timely manner.

3.4 The price matrix shall serve as the basis for establishing the value of the Work to be performed.

3.5 Job Order Contractor's proposal shall be submitted within ten (10) working days unless otherwise agreed.

3.6 Upon receipt of Job Order Contractor's proposal, Owner will review the proposal for completeness and will reach agreement with Job Order Contractor on pricing, schedule, and all other terms, prior to issuance of a Job Order.

3.7 In the event Owner does not issue a Job Order after receipt of Job Order Contractor's proposal, Owner is not obligated to reimburse Job Order Contractor for any costs incurred in the preparation of the proposal, except as noted in ***Article 4.3***.

4.0 SCHEDULING OF WORK

4.1 For each Job Order, Owner will issue a Notice to Proceed. The first day of performance under a Job Order shall be the effective date specified in the Notice to Proceed. Any preliminary work started or material ordered or purchased before receipt of the Notice to Proceed shall be at the risk and expense of Job Order Contractor. Job Order Contractor shall diligently prosecute the Work to completion within the time set forth in the Job Order. The period of performance includes allowance for mobilization, holidays, weekend days, normal inclement weather, and cleanup. Therefore, claims for delay based on these elements will not be allowed. When Job Order Contractor considers the Work complete and ready for its intended use, Job Order Contractor shall request Owner to inspect the Work to determine the status of completion. When Owner determines the Work to be Punch List Prepared as defined in Article 1, Owner will provide Contractor with a list of items to be completed or corrected prior to final payment for the Job Order. Job Order Contractor shall proceed promptly to complete and correct items on the list.

4.2 Job placement of materials and equipment shall be made with a minimum of interference to Owner operations and personnel.

4.3 Furniture and portable office equipment in the immediate work area will be moved by Job Order Contractor and replaced to its original location. If the furniture and portable office equipment cannot be replaced to its original location, Owner will designate new locations. If furniture and portable office equipment (or other items) must be moved and/or stored outside the immediate area, Owner will compensate Job Order Contractor for any such transportation and storage costs incurred.

4.4 Job Order Contractor shall take all precautions to ensure that no damage will result from its operations to private or public property. All damages shall be repaired or replaced by Job Order Contractor at no cost to Owner.

4.5 Job Order Contractor shall be responsible for providing all necessary traffic control, such as street blockages, traffic cones, flagmen, etc., as required for each Job Order. Proposed traffic control methods shall be submitted to Owner for approval.

5.0 QUALITY ASSURANCE/QUALITY CONTROL PROGRAM

5.1 Job Order Contractor shall submit, for Owner approval, a Quality Assurance/Quality Control Plan within fifteen (15) calendar days after issuance of the initial Job Order. This plan should address all aspects of quality control including responsibility for surveillance of work, documentation, trend analysis, corrective action and interface with Owner's inspectors.

6.0 DESIGN

6.1 In accordance with the provisions of A. R. S. § 34-602 & 603, the OWNER may require the Job Order Contractor to contract with one or more Design Professionals to provide architectural or engineering design of the Project.

6.2 As an alternative to ***Article 6.1***, and in accordance with the provisions of A. R. S. § 34-602 & 603, the Owner may elect to contract separately with one or more Design Professionals to provide architectural or engineering design of the Project.

6.3 Whether the Owner or the Job Order contractor contracts with the Design Professional, it is expected that some or all the following services will be provided during the performance of the work:

6.3.1 The Design Professional will provide administration of the work. The Owner and the Contractor will endeavor to communicate through the Design Professional. Communications by and with the Design Professionals' consultants will be through the Design Professional.

6.3.2 The Design Professional will visit the Site at intervals appropriate to the stage of construction to become generally familiar with the progress and quality of the completed work and to determine in general if the work is being performed in accordance with the contract documents. The Design Professional will keep the Owner informed of progress of the work and will endeavor to guard the Owner against defects and deficiencies in the work.

6.3.3 Upon the Job Order Contractor's submittals, the Design professional will review and approve or take other appropriate action on submittals as Shop Drawings, Product Data, and Samples.

6.3.4 All drawings produced for projects under this contract are the property of the Owner and are owned in whole by the Owner for any and all future use and considerations.

7.0 PROJECT AS-BUILTS

7.1 An individual Job Order's scale, complexity, and proximity to agency rights-of-way will determine the specific as-built requirements for each individual job order project. Unless otherwise determined at the time of the job order award that project as-builts will not be required, the Job Order Contractor shall assume that they must satisfy the as-built requirements of both the Owner as the permitting agency and the OWNER as the project owner. For Job Orders near rivers and streams, additional as-built requirements may by imposed.

7.2 To satisfy the requirements of the Owner as the permitting agency, the Job Order Contractor shall retain the services of an Arizona Registered Land Surveyor to as-built the constructed condition of all grading, drainage, hardscape, and underground utility civil improvements. The Job Order Contractor will be required to meet the requirements of Chapter 7 of the Owner's Infrastructure Development Design Guidelines and shall make the required submissions to the permitting agency sufficiently in advance of Final Completion.

7.3 To satisfy the requirements of PSWID, as the OWNER, the Job Order Contractor shall prepare industry standard redline as-built/record drawings on a clean print of the construction documents or relevant shop drawing. The Job Order Contractor shall neatly mark and post to these drawings any clarification or scope changing documents issued by the design professional and shall neatly mark the drawings to indicate variances from the designed condition. The Job

Order Contractor shall submit the as-built documents to the job order project manager for review, correction, and approval sufficiently in advance of Final Completion.

8.0 UTILITY COMPANY COORDINATION

8.1 Unless specifically excluded by the Individual Job Order Agreement, the Job Order Contractor will be responsible for coordinating with utility design work for permanent service to the project and will ensure that the work takes place in a timely manner and does not impact the project schedule. Any utility design fees for permanent services to a project will be paid by the Owner.

9.0 TEMPORARY SANITATION FACILITIES

9.1 The Contractor shall provide ample toilet facilities with proper enclosures for the use of workmen employed on the work site. Toilet facilities shall be installed and maintained in conformity with all applicable state and local laws, codes, regulations and ordinances. They shall be properly lit and ventilated, and kept clean at all times.

9.2 Adequate and satisfactory drinking water shall be provided at all times and under no circumstances and under no conditions will the use of common cups be permitted. The Contractor must supply sanitary drinking cups for the benefit of all employees.

10.0 DUST CONTROL AND WATER

10.1 The dust control measures shall be in accordance with industry standards and local and State requirements as well as community standards with reasonable accommodations to the public. Water or other approved dust palliative in sufficient quantities shall be applied during all phases of construction involving open earthwork to prevent unnecessary discharge of dust and dirt into the air. The Contractor shall be responsible for compliance with these regulations. A Notice to Proceed will not be issued until the Owner has received a copy of the Contractor's Dust Control Plan and Permit if applicable.

10.2 The Contractor shall keep suitable equipment on hand at the job site for maintaining dust control on the project streets, and shall employ sufficient labor, materials and equipment for that purpose at all times during the project to the satisfaction of the Owner.

10.3 Watering shall conform to the provisions of Section 225 of the MAG Standard Specifications. The cost of watering will be included in the price bid for the construction operation to which such watering is incidental or appurtenant.

10.4 Installation and removal of fire hydrant meters should be scheduled at least forty-eight (48) hours in advance through the OWNER. A $1,000 deposit is required for each meter. An additional $28.00 service fee is also required. The cost of the water is at the prevailing rate.

11.0 ELECTRICITY

11.1 If available the Owner may furnish to Job Order Contractor from existing Owner facilities. It is the responsibility of Job Order Contractor to determine the extent to which existing Owner electrical facilities are adequate for the needs of this Contract.

11.2 Upon completion of this Contract the removal of all taps, connections and accessories will be accomplished by and at the expense of Job Order Contractor, and costs included in the Job

Order Proposal, so as to leave the electrical power source and facility in its original condition. Such removal shall also be subject to the approval of Owner.

12.0 WORK BY OWNER

Owner reserves the right to undertake work and/or award Contracts for the performance of the same or similar type work contemplated herein, and to do so will not breach or otherwise violate the Contract.

APACHE UNDERGROUND & EXCAVATION
P.O. BOX 134
LAKESIDE, ARIZONA, 85929

Mark Gardner

By: Mark Gardner

Title: Owner

10/18/18

Date:

PINE-STRAWBERRY WATER IMPROVEMENT DISTRICT
6306 WEST HARDSCRABBLE ROAD
PINE, ARIZONA, 85544

By: Robert Arbuthnot

Title: Chairman

10/18/18

Date:

Sharon Hillman

Attested To:

TREASURER

BY:

10/18/18

Date:

EXIBIT A
JOC General Scope of Services

EXIBIT B
RSOQ & Contractor's Response

EXIBIT C

JOC Cost Proposal Forms
(Pricing Matrix & Project Cost Sheet)

EXIBIT D

Contractor's Contacts
(Contact List & Authorized Signature Form)

APACHE UNDERGROUND AND EXCAVATING, LLC

Job Order Contract

RSOQ Waterline Replacement and Water Facilities Improvement Project Construction Work for Pine-Strawberry Water Improvement District

7/26/2018

July 26, 2018

Pine-Strawberry Water Improvement District
6306 W. Hardscrabble Road
Pine, Arizona 85544

Dear Selection Committee Members:

Apache Underground and Excavating, LLC (AUE) appreciates the opportunity to submit our Request for Statement of Qualifications for Job Order Contract: Waterline Replacement and Water Facilities Improvement Project Construction Work.

AUE is qualified to perform JOC services to the Pine-Strawberry Water Improvement District as we offer a qualified team of professionals, with comprehensive experience in the specific projects the District has outlined. AUE has worked extensively for cities, counties, tribal government, HUBZone, sanitary districts and private entity es to provide quality construction, workmanship and client satisfaction. Our employees are highly trained and hold several certifications. We have accounting and budgetary oversight to keep projects on schedule and under budget at a reasonable profit. We have completed every project on time or early and within budget, since the creation of our company in 2009. We have very positive customer service and letters of recommendation are available upon request.

AUE prides itself on going the extra mile for customers, while being extremely competitive with our pricing. We do not waste time or money. Customers often express how pleased they are with our ability to effectively work in the field, to resolve unexpected issues and that our staff is professional, knowledgeable, prepared in all situations. AUE works to build strong, lasting relationships with the customer, providing a product the community as a whole can utilize, with confidence, for years to come.

We are available and excited about the opportunity to work with the Pine-Strawberry Water Improvement District on this JOC project. We thank you for your consideration of our qualifications and if you need additional information, please feel free to contact our office at (928) 537-7277.

Sincerely,

Mark and Melinda Gardner, Owner/ Managers
Apache Underground and Excavating, LLC

Qualifications and Experience

1) Town of Florence-Waterline replacement projects
    a. Description and Experience: Replace 12", 8", 6", and 4" watermain including service laterals and hydrants. (Individual projects available upon request)
    b. Value: $1,217,231
    c. Reference: Town of Florence (Owner), Tim Wainscott (Project Manager) 520-251-2131
    d. WIFA funded on one or more jobs.

2) City of Globe-Waterline replacement projects
    a. Description and Experience: Replace 8" and 6" watermains including service laterals, hydrants, regulators, PRVs, and tank pads. (Individual projects available upon request)
    b. Value: $911,378
    c. Reference: City of Globe (Owner), Jerry Barnes (Public Works Director), 812-219-2356
    d. WIFA funded on one or more jobs.

3) City of Show Low-Waterline replacement projects
    a. Description and Experience: Replace 12", 10", 8", 6" and 4" watermain including service laterals, hydrants, and booster pumps. (Individual projects available upon request)
    b. Value: $1,970,483
    c. Reference: City of Show Low (Owner), Shane Hemesath (City Engineer), 928-532-4090
    d. WIFA funded on one or more jobs.

4) Arizona Water Company-Waterline replacement projects
    a. Description and Experience: Replace 12", 10", 8", 6" and 4" ductile iron watermain including service laterals and hydrants. (Individual projects available upon request)
    b. Value: $1,499,776
    c. Reference: Arizona Water Company (Owner), Lee Hetrick (District Manager), 928-300-2663
    d. WIFA funded on one or more jobs.

5) Tonto Apache Tribe
    a. Description and Experience: Install new 8" watermain including service laterals and hydrants.
    b. Value: $757,431
    c. Reference: Tonto Apache Tribe (Owner), Farrell Hoosava (Tribal Council Member), 928-474-5000 Ext. 8133

6) Forest Lakes Domestic Water Improvement District-Waterline replacement projects
    a. Description and Experience: Replace 8", 6", and 4" watermain including service laterals and hydrants. (Individual projects available upon request)
    b. Value: $313,548
    c. Reference: Forest Lakes Domestic Water Improvement District (Owner), Grant (System Manager) 928-240-2294

7) Town of Payson-Waterline replacement projects
    a. Description and Experience: Replace 12", 8", 6", and 4" watermain including service laterals, hydrants, and casing bores. (Individual projects available upon request)
    b. Value: $653,815
    c. Reference: Town of Payson (Owner), Tanner Henry (Water Manager), 928-978-2221
    d. WIFA funded on one or more jobs.

8) Additional Qualifications:
    a. Subcontractor with McCauley Construction in Pine-Strawberry
    b. Currently under contract by CO-OP agreement with Pine-Strawberry

Additional Customers available upon request.

Acknowledgement of Addendums

Date: July 9, 2018 Addendum: #1

8-10

Apache Underground and Excavating LLC Pricing Matrix & Project Cost Sheet						
Category	Unit	Size/Inch	Material	Specification	Comment	Cost
Pipe	Ft	12	PVC	C900, Class 150, MAG 610	Includes Install, 1 length of pipe and 1 Joint Restraint	72
Pipe	Ft	12	PVC	C900, Class 200, MAG 610	Includes Install, 1 length of pipe and 1 Joint Restraint	86
Pipe	Ft	10	PVC	C900, Class 150, MAG 610	Includes Install, 1 length of pipe and 1 Joint Restraint	54
Pipe	Ft	10	PVC	C900, Class 200, MAG 610	Includes Install, 1 length of pipe and 1 Joint Restraint	64
Pipe	Ft	8	PVC	C900, Class 200, MAG 610	Includes Install, 1 length of pipe and 1 Joint Restraint	40
Pipe	Ft	8	PVC	C900, Class 150, MAG 610	Includes Install, 1 length of pipe and 1 Joint Restraint	31
Pipe	Ft	6	PVC	C900, Class 150, MAG 610	Includes Install, 1 length of pipe and 1 Joint Restraint	22
Pipe	Ft	6	PVC	C900, Class 200, MAG 610	Includes Install, 1 length of pipe and 1 Joint Restraint	26
Pipe	Ft	4	PVC	C900, Class 150, MAG 610	Includes Install, 1 length of pipe and 1 Joint Restraint	20
Pipe	Ft	4	PVC	C900, Class 200, MAG 610	Includes Install, 1 length of pipe and 1 Joint Restraint	24
Pipe	Ft	3	PVC	Schedule 40, MAG 640	Includes Install, 1 length of pipe and 1 Joint Restraint	12
Pipe	Ft	3	PVC	Schedule 80, MAG 641	Includes Install, 1 length of pipe and 1 Joint Restraint	14
Pipe	Ft	2	PVC	Schedule 40, MAG 642	Includes Install, 1 length of pipe and 1 Joint Restraint	8
Pipe	Ft	2	PVC	Schedule 80, MAG 643	Includes Install, 1 length of pipe and 1 Joint Restraint	12
Pipe	Ft	1	PVC	Schedule 40	Includes Install, 1 length of pipe and 1 Joint Restraint	8
Pipe	Ft	1	PVC	Schedule 80	Includes Install, 1 length of pipe and 1 Joint Restraint	9
Pipe	Ft	1	HDPE	ASTM D2239	Includes Install, 1 length of pipe and 1 Joint Restraint	8
Pipe	Ft	1	PEX		Includes Install, 1 length of pipe and 1 Joint Restraint	8
Pipe	Ft	3/4	PVC	Schedule 40	Includes Install, 1 length of pipe and 1 Joint Restraint	6
Pipe	Ft	3/4	HDPE	ASTM D2239	Includes Install, 1 length of pipe and 1 Joint Restraint	7
Pipe	Ft	3/4	PEX		Includes Install, 1 length of pipe and 1 Joint Restraint	7
Pipe	Ft	12	HDPE	AWWA C906	Includes Install, 1 length of pipe and 1 Joint Restraint	115
Pipe	Ft	10	HDPE	AWWA C906	Includes Install, 1 length of pipe and 1 Joint Restraint	86
Pipe	Ft	8	HDPE	AWWA C906	Includes Install, 1 length of pipe and 1 Joint Restraint	63
Pipe	Ft	6	HDPE	AWWA C906	Includes Install, 1 length of pipe and 1 Joint Restraint	46
Pipe	Ft	4	HDPE	AWWA C906	Includes Install, 1 length of pipe and 1 Joint Restraint	33
Pipe	Ft	3	HDPE	AWWA C906	Includes Install, 1 length of pipe and 1 Joint Restraint	14
Pipe	Ft	2	HDPE	AWWA C906	Includes Install, 1 length of pipe and 1 Joint Restraint	13
Elbow	Ea	12	CL		Materials Only Includes Restrained Joint	740
Elbow	Ea	10	CL		Materials Only Includes Restrained Joint	560
Elbow	Ea	8	CL		Materials Only Includes Restrained Joint	325
Elbow	Ea	6	CL		Materials Only Includes Restrained Joint	230
Elbow	Ea	4	CL		Materials Only Includes Restrained Joint	160
Elbow	Ea	3	CL		Materials Only Includes Restrained Joint	165
Elbow	Ea	2	CL		Materials Only Includes Restrained Joint	10

Tee	Ea	12	CL		Materials Only Includes Restrained Joint	1000
Tee	Ea	10	CL		Materials Only Includes Restrained Joint	850
Tee	Ea	8	CL		Materials Only Includes Restrained Joint	500
Tee	Ea	6	CL		Materials Only Includes Restrained Joint	340
Tee	Ea	4	CL		Materials Only Includes Restrained Joint	250
Tee	Ea	3	CL		Materials Only Includes Restrained Joint	250
Tee	Ea	2	CL		Materials Only Includes Restrained Joint	18
Cross	Ea	12	CL		Materials Only Includes Restrained Joint	1300
Cross	Ea	10	CL		Materials Only Includes Restrained Joint	1100
Cross	Ea	8	CL		Materials Only Includes Restrained Joint	700
Cross	Ea	6	CL		Materials Only Includes Restrained Joint	500
Cross	Ea	4	CL		Materials Only Includes Restrained Joint	350
Cross	Ea	3	CL		Materials Only Includes Restrained Joint	271
Cross	Ea	2	CL		Materials Only Includes Restrained Joint	20
Gate Valve	Ea	12		MAG 610.7, 630	Materials Only Includes Valve, Box, & Cover	1701
Gate Valve	Ea	10		MAG 610.7, 631	Materials Only Includes Valve, Box, & Cover	1395
Gate Valve	Ea	8		MAG 610.7, 632	Materials Only Includes Valve, Box, & Cover	909
Gate Valve	Ea	6		MAG 610.7, 633	Materials Only Includes Valve, Box, & Cover	607
Gate Valve	Ea	4		MAG 610.7, 634	Materials Only Includes Valve, Box, & Cover	496
Gate Valve	Ea	3		MAG 610.7, 635	Materials Only Includes Valve, Box, & Cover	455
Gate Valve	Ea	2		MAG 610.7, 636	Materials Only Includes Valve, Box, & Cover	345
Air Relief Valve	Ea	3/4		Per AWC Detail E-9-8-3	Materials Only	1479
Air Relief Valve	Ea	1		Per AWC Detail E-9-8-4	Materials Only	1479
Service Connection	Ea	2		Per Detail	Materials Only Includes Valve, Box, & Cover	1480
Service Connection	Ea	1		Per Detail	Materials Only Includes Valve, Box, & Cover	1000
Service Connection	Ea	3/4		Per Detail	Materials Only Includes Valve, Box, & Cover	780
Utility Crossing	Ea	6		Per Detail	Cost in addition to unit cost of item	900
Utility Crossing	Ea	3		Per Detail	Cost in addition to unit cost of item	600
Utility Crossing	Ea	4		Per Detail	Cost in addition to unit cost of item	800
Utility Crossing	Ea	2		Per Detail	Cost in addition to unit cost of item	500
Pavement R & R	SY			Per Detail	3" AC/6" ABC	54
Pavement R & R	SY			Per Detail	2" AC/6" ABC	50
Plating of Trenched	LF				Quantity by length of late based on 4" width	21

Rock Excavation	CY	As Needed		Use EPS Spec ??	Cost in addition to unit cost of item	250
Leakage/Pressure Test	LS			MAG	Per Set Up	3700
Mobilization	LS	Per Job			Includes Demobilization and Incidental Costs	900
Sawcut Exist Asphalt	LF					0.55
Sawcut Exist Concrete	LF				4"-6" thick	0.55
R & R Sidewalk	SF				4"Conc/4"ABC	35
R & R Driveway	SF				6"Conc/4"ABC	45
Compaction Testing		Per Half Day				2000
Crew Time	Hour				Specify rate for workers and equipment	
					Backhoe & Operator (per backhoe)	120
					Crew Truck (per truck)	50
					12 YD Dump Truck	95
					24 YD Dump Truck	130
					Excavator (per excavator)	190
					Track Skid	95
					Water Truck (per truck)	85
					Administrative Personnel	42
					Supervisor	48
					Pipelayer	38
					Laborer	33

Ability and Willingness to Respond

Apache Underground and Excavating, LLC (AUE) is located in Lakeside, Arizona. AUE has a construction office, maintenance and material yard that is available to staff at all times. In addition, AUE would set-up and equip a temporary yard in the Pine-Strawberry area to better service the community, if awarded the JOC. There is an owner, project manager and support staff available to contact 24 hours per day via mobile phone or email and AUE construction staff is available to respond to emergencies within 24 hours of contact. We are able to begin work on assignments and job orders within two (2) days of individual job order award. AUE has a highly trained administrative staff with years of experience in WIFA regulations/requirements and working with project owners and staff to insure all necessary paperwork is submitted.

AUE is able to provide mobilization, traffic control, labor, equipment, jobsite safety, material, tapping and testing equipment, road plates, rock excavation, asphalt pavement patching, general concrete work, installation of concrete collars and additional support equipment to replace any surface encountered within the Pine-Strawberry area. We will follow all job specifications, MAG specifications and Pine-Strawberry Supplemental details. We work with utility companies, surveyors and Blue Stake to maximize efficiency and minimize delays.

We understand the unique challenges of working in a close, busy environment within a short time-frame. We are familiar with the annual changes in population with summer and winter visitors in Pine-Strawberry and would work to minimize interruptions and traffic delays.

Construction Methods and Techniques

Apache Underground and Excavating, LLC (AUE) has set new standards in the construction field in Eastern Arizona. We are dedicated to improving the efficiency, cost effectiveness, quality and safety of our projects. We will meet with the owners, engineers, design professionals, and project managers to find a solution that will benefit the client. We keep up to date with construction trends and new materials that will offer the best product. We have offered suggestions to clients that gave them a better product at a better price. We are committed to client satisfaction and value engineering.

AUE has a high standard of project management. We dedicate a considerable amount of time prior to the start of a project to identify any problems or challenges, develop a project schedule, and coordinate subcontractors and suppliers including registered land surveyors. We are able to quickly mobilize our employees, equipment and materials to begin a project on time. With 30 years of construction experience, our Project Managers are able to direct our staff using the best and most efficient practices. *We do not waste project time by being unprepared.*

Additionally, we are focused on the safety and education of our employees. We have an Alcohol and Drug Abuse policy with termination for violations, weekly safety meetings conducted by trained staff, safety clothing and materials, and safety equipment available on all job sites. AUE provides its employees with the safety tools they will need to protect themselves, the safety equipment needed to insure all jobs are performed in the safest and most efficient way, and sanitation facilities for a clean work environment. We stress and provide company training in CPR/First Aid, trench safety, confined space entry, traffic control and public safety to our employees.

We have extensive experience in large and small diameter waterline replacement, PRV replacement, booster pump installation, and service connections. We have had zero (0) lost days due to accidents and one (1) on the job injury in our nine (9) years of operation.

All job-site personnel hold certifications in OSHA Permit Required Confined Spaces (29 CFR, Part 1910.146), OSHA Excavation Standards (29 CFR, Part 1926, Subpart P) and Competent Person Trenching and Excavating – Confined Space Entry. Additionally, all AUE personnel is CPR/First aid certified.

Resources

Apache Underground and Excavating, LLC (AUE) is fully staffed with Project Managers, Superintendents, equipment operators, pipe fitters, laborers and support staff to begin work on projects for the Pine-Strawberry Water Improvement District. Our qualified staff brings over thirty (30) years of construction experience. We own a fleet of construction equipment including excavators, backhoes, loaders, track skid steer (with paving capabilities), dump trucks, belly dump, low boy, soft dig capabilities, pipe locators, and extensive support equipment. We are fully supplied with traffic control signage and barricades.

AUE is based in Lakeside, Arizona and has been providing construction services for nine (9) years. These years of experience have let us develop strong working relationships with local suppliers and subcontractors. We utilize local business as much as possible and support the small businesses. We have positive working accounts and relationships with several key material suppliers. We often subcontract with C&L Asphalt, McCauley Construction and Peters Concrete.

AUE has a business relationship with a metal fabricating shop that focuses on specialty metal fabrication. We have certified structural and pipe welding professionals including, AWS, NCCER level 1, 2, & 3, ASME Level 6 certified welders on staff.

OLD REPUBLIC SURETY COMPANY

17505 N. 79th Avenue, Suite 102, Glendale, AZ 85308 | T: 800.213.8230 | F: 602.279.8929 | www.orsurety.com

July 25, 2018

Re: Apache Underground & Excavating LLC
Lakeside, AZ

To whom it may concern,

Please be advised that Old Republic is the surety of record for Apache Underground & Excavating LLC. Apache Underground & Excavating LLC is an account in good standing and we are pleased to offer this recommendation on their behalf.

Old Republic is an approved surety by the US Department of the Treasury and is licensed in all 50 states. Our Best's rating is A and financial capacity VII.

We understand that Apache Underground & Excavating LLC is desirous of becoming prequalified. Old Republic has supported Apache Underground & Excavating LLC on projects up to $1,500,000 single and $3,000,000 aggregate. Actual approval of bid and final bonds however will be subject to review and approval of contract terms and conditions, bond forms and project financing as well as other underwriting criteria pertinent at the time such bonds are requested by Apache Underground & Excavating LLC.

This letter is not a assumption of any liability, nor is it a bid, performance and payment obligation. We are pleased to share with you our favorable experience and high regard for Apache Underground & Excavating LLC.

Sincerely,

Chad Brokhausen
Senior Contract Underwriter

Conclusion

Apache Underground and Excavating, LLC is the best company to award the Pine-Strawberry JOC. We have the ability and knowledge to complete any project in the scope of work outlined by the District. We have a positive work history with many of the municipalities surrounding Pine-Strawberry and will bring the same level of quality and superior workmanship to the District.

We are aware that many community members have expressed concerns with a contractor taking advantage of the award dollars. AUE is a small business, we are very aware of budget restrictions and the critical use of efficiency, communication and planning to complete a project. We are always working to reduce cost and pass those savings on to the customer while still providing outstanding, quality service the community will value.

Thank you for your consideration. We are happy to meet with you to answer any questions or provide additional information.

Contact List and Authorized Signature Form

Authorized Signers:

Melinda Gardner – Managing Member/Owner 928-537-7277

Mark Gardner – Member/Owner/Project manager 928-242-1055

Cari Lindquist – Office Manager 928-537-7277

Additional contacts:

Matt Reidhead – Project Forman 928-243-7889

MEMORANDUM

To: Mayor and Town Council
From: Brent Billingsley, Town Manager
Copy: Department Heads
Date: April 1, 2019
Re: Town Manager's Report

I thought that it would be important to make the connection between the Council Strategic Plan and current Town priorities, therefore this memo provides select updates by Strategic Plan Area. It is not intended to be exhaustive list, just an update on one project per area. I do not want to supplant or duplicate the individual department reports that Council receives on a monthly basis.

Community Vitality: Pooch Party is an annual event held in conjunction with the Pinal County Animal Care and Control. This event, held on Saturday, February 23rd is a "one-stop" convenience for Pinal County dog owners. Employees from the Animal Care and Control offer shots (Rabies, Parvo and Bordetella for $9 to $21) as well as microchips ($20) and a variety of licensing fees. Licensing fees ranged from $6 (a senior citizen owner) to $30 for an unaltered dog. Five dogs available for adoption were brought by Animal Care and Control for a $65 fee each (included all shots and licensing). Mayor Tara Walter and Councilmember Kristen Larsen stopped by the event as well. County Animal Care and Control staff stated how pleased they were with the response.

Teens from Phoenix, Apache Junction, Chandler and Florence attended the Third Annual Teen Symposium, presented by the Florence Teen Council. The event was held in the Library and Community Center from 9:00 a.m. to 2:00 p.m. on Saturday, February 23rd. Pre-registration yielded 70 participants, but weather conditions reduced that to 45 teens. The symposium is designed to provide teens the opportunity to network with others, attend helpful and informative sessions specific to today's teens and hear influential guest speakers. Kim "Koko" Hunter and David Lewis, FTC advisors along with FTC members, organized the conference. Participants attended two breakout sessions with three guest speakers (Jazmine Hall, Anita Cota Soto and Tomas Stanton) and after lunch, listened to the keynote speaker, Alonzo Jones. Mr. Jones is an associate athletic director at Arizona State and a national motivational speaker. He also was a presenter at the recent Arizona League of Cities and Towns conference. His message to the teens on Saturday emphasized: Balance, Planning and Perseverance. Mayor Tara Walter and Councilmember Kristen Larsen attended and issued welcomes to all the participants. Councilmember Karen Wall also attended.

Economic Prosperity: The next session in the Central Arizona College "Workforce Education Business Series", sponsored by the Town of Florence and the Greater Florence Chamber of Commerce will be held on April 2nd. The session is titled "Communication in the Workplace". The remaining schedule of topics is as follows:

- Communication in the Workplace, April 2nd
- Business Finance, May 7th
- Customer Service, June 4th

- Optimum Performance, June 25th

Sessions are held from 6:00 to 8:00pm and are priced at $10 per session or $30 for the whole series. Interested parties should contact Monica Shumway at 520-494-6651.

Leadership and Governance: The Town of Florence regularly surveys its residents about their opinions on topics such as quality of life, service delivery, civic participation and unique issues of local interest. These periodic surveys offer staff, elected officials and others with an opportunity to identify challenges and plan for and evaluate improvements. Florence's next Citizen Survey will be distributed in the next few weeks. A random sample was generated to determine which residents will be sent a survey from the Florence Registered Voters Database. Survey instructions will be provided in the packet that will be mailed (or e-mailed) to each voter in the sample.

Partnerships and Relationships: While Community Services Department is not responsible for the planning, organization and coordination of this event, we are assisting. The parade, which is on Saturday, March 30th starting at 10:00 a.m., will stage at Heritage Park and then proceed south on Main Street. At the completion of the parade, organizers will hold a ceremony at Padilla Park at 11:00 a.m. Parks and Recreation is providing a sound system and chairs for the ceremony. We are also providing support by ensuring barricades are placed along Main Street during the parade. PD and Public Works are also involved in this service.

Little League's opening day begins with a parade of teams, coaches and players. The league has also arranged for bounce houses, raffles to raise money to support league functions, food and DJ music. Boys and Girls Major League baseball and softball games will be played as well. Community Services has met and worked with Little League officials since November to coordinate operations for this upcoming season.

The Town's Fifth Annual Road to Country Thunder music spectacular is Saturday, April 6th on downtown Main Street. The four country artists are Cameron Byfield, Ryan and the Renegades, Austin Burke and Harry Luge, Jr. Byfield opens the show at 5:00 p.m. and Luge is the final performer starting at 8:30 p.m. While the actual performers begin at 5:00 p.m., Main Street by the Silver King Market Place will be closed to accommodate the stage set-up. Main Street south will close later in the day as 5:00 p.m. approaches. The event also features a beer garden and food vendors. Community Services has once again partnered with Country Thunder representatives to present this event. Other sponsors include KMLE, Greater Florence Chamber of Commerce, American Legion and Pinal County Mounted Posse. For more information, please call Alison Feliz at (520) 868-7585.

Transportation and Infrastructure: Well #2B project update: Well #2B has been successfully equipped, inspected and final billed. The pipefitting and control project will be next. The project should begin construction in May.

The 12" Water Loop Project (Phase 3A), is complete. Water line is installed, pressure tested and bacterial tested. The Town's 8" distribution project will kick off on April 25th.

The Town has installed a fire sprinkler system in the Public Works Building. Inspections are scheduled for April.

Upcoming Events/Meetings/Forums:

- April 6th 4:30 p.m. Main Street Mural Dedication
Historic Downtown Florence
- April 6th 5:00 p.m.-10:00 p.m. Road to Country Thunder
Historic Downtown Florence
- April 13th 9:00 a.m.-11:00 a.m. Eggstravaganza
Heritage Park
- April 19th 10:00 a.m.-12:00 p.m. Easter Party
Senior Center

Success Stories:

- State Shared Revenues
    - Statewide, revenues in February were up by 2.2% over last year. So far this year, the State is $(132) million below its forecast. This is likely due to income tax payments, and hopefully will reverse back to positive territory for next month's reports. All other economic indicators are strong, so the State believes this drop in forecast is an anomaly. Nonetheless, the timing is bad, because it could convince many of the legislators to reign in spending as part of the upcoming budget.

    - Of particular importance to Florence, the State has seen a modest increase in HURF collections. These have increased by 4.8% over last year-to-date, despite higher gas prices and increased fuel efficiency. To date, the State has collected $27.1 million more than anticipated in HURF.

    - Building permits are presenting a mixed bag, both in Florence as well as across the State. Year-over-year, we have seen a slight decline (from 30 permits in 2018 to 27 in 2019). Maricopa County has seen a 14.6% increase in permits, but the number of Maricopa County home sales are down by nearly 12% since last year at this time. We expect to see Florence's numbers jump in the near future, with the addition of DR Horton (Anthem), Wade Journey Homes (Downtown), and J Carl Homes (Downtown) beginning to build.

Current Advertisements:

The following Requests for Proposals are currently Open:

1. Aquatic Center Concession Services: closes on 4.5.19

The following Requests for Proposals are Under Review:

1. None

TOWN OF FLORENCE

Community Development
224 W. 20th Street
Florence, AZ 85132
Office: 520-868-7542
Fax: 520-868-7546

COUNCIL MEETING DATE: April 1, 2019

STAFF PRESENTER: Larry Harmer

SUBJECT: Community Development Monthly Report

Projects:

Anthem at Merrill Ranch

- Unit 5
  - Landscape Plan submitted 2/13/19
  - Pave 1st QTR 2019
- Unit 7
  - Landscape Plan submitted 2/13/19
  - Pave 1st QTR 2019
- Unit 24
  - Improvement Plan approved
  - Final plat approved and recorded
  - Landscape Plan submittal 2020
- Unit 32
  - Improvement Plan approved
  - Final plat approved and recorded
  - Landscape Plan submittal 2019
- Unit 34
  - Improvement Plan approved
  - Landscape Plan submittal 2020
- Unit 52
  - Paved – working on adjustments
  - Landscape completed
  - Letter of Acceptance being completed

- Unit 55A
    - Grading permit approved

- Units 56B and 58
    - Preplat late 2019

- Unit 57
    - Preplat in 2019
    - Grading with Unit 55

- Unit 60
    - Improvement Plan approved
    - Final Plat recorded
    - Landscape Plan submittal – 2nd Quarter 2019
    - Grading permits approved

Attaway Crossing Annexation

- A preliminary land plan was shared showing primarily single family residential with a 20-acre commercial site
- Updates have been received from Applicant
    - A new annexation petition needs to be submitted
    - A revision to the cost-benefit has been prepared that addresses years 11-20
    - A new PUD will be submitted to address this development as free-standing (separate from Merrill Ranch)
- Contact from property owner – proceeding with application
- No update from previous report.

Building Code

- FINAL 2012 ICC Code Adoption is being prepared for Town Council adoption

Rail 3 – 390 N. Main Street

- Certificate of Occupancy has been issued.

Kokopelli Moon Saloon – 255 N. Main Street

- Council awarded demolishing contract.

Florence Artisan Acres (Windmill Winery)

- A new Development Agreement was approved by Town Council on September 4, 2018
- Design Review for the new Winery Inn was approved by the Planning and Zoning Commission of August 16, 2018.
- No new updates from previous report.

Monarch/Aspen Farms

- Submittal for new Planned Unit Development (PUD) under review
- 1st review comments have return to the applicants for response/revisions
- Town staff has been meeting with applicant to discuss revisions

Smith Building

- Remodeling continuing under current permit

Parking and Sign Code Amendments

- Planning and Zoning Commission held their first Public Hearing on December 20 with a second Public Hearing on January 17, 2019. Recommendation for adoption.
- Town Council Public Hearings are scheduled for March 4 and March 18, 2019.
- A Council work session has been scheduled for March 25 to review.

470 South Main Street

- A rezoning request has been received from the property owner to rezone from NO-Neighborhood Office to B-2 Downtown and Highway Business.
- Planning and Zoning Commission Public Hearing is scheduled for March 7, 2019
- Town Council Public Hearings are scheduled for March 18 and April 1, 2019.

Permits Issued February 2019 *(March 2019 totals should available the 2nd week in April)*

- BLD-RES-SFR-NEW – 12 (Total of 27 for the calendar year)
- OTHER – 39
  TOTAL – 51

Memorandum

To: Brent Billingsley, Town Manager

From: Bryan C. Hughes, Community Services Director

Date: March 15, 2019

Re: March 2019 Department Report

Project Updates:

- The Town submitted a draft of the 30% design documents, along with an updated Plan of Development (POD) to Bureau of Land Management (BLM) on March 15th. Staff and our consultants are scheduled to meet at the BLM Lower Sonoran District Office on Tuesday, March 19th to review the design and move forward with the process.
- WestLand Resources submitted their Cultural Inventory of 403 acres for the Poston Butte Expansion Project to the BLM for review. BLM is still reviewing the document and are backlogged due to the recent federal government shutdown.
- J2 Engineering and Environmental Design has completed the initial 30% draft design on the Poston Butte Preserve Expansion Project. The Bureau of Land Management (BLM) will be reviewing and providing comments.
- Michael Baker International, the consultant working on the Active Transportation Plan, submited a working paper in January, outlining current conditions and our next steps. A joint work session with the Planning and Zoning Commission and the Parks and Recreation Advisory Board to review draft plan will be scheduled in April followed by a presentation to the Town Council in early May. The project continues to move forward and is scheduled to be completed in June.
- GreenPlay, the consultant working on the Parks and Recreation Comprehensive Plan, continues to collect information for the plan. The parks and recreation survey will be mailed to homes in late March and will be available to the general public in mid-April.
- The Veterans Memorial Committee will meet on Wednesday, March 20th as fundraising efforts continue. The American Legion is taking the lead on fundraising and all donations made through them may be eligible for a tax deduction.

Special Events

- The Concerts in the Park, held each Friday evening in February at Padilla Park, were successful. The last one of the series on Friday, February 22nd was cancelled due to inclement weather. The concert, featuring local band "10th & Main," was rescheduled to Friday, March 15th.
- Saturday, March 30th will be a busy day in Florence. The 75th Anniversary of the G.I. Bill event will take place in Historic Downtown Florence beginning with a parade on Main Street and concluding with activities at Padilla Park. Later that

day, Florence Little League will be officially kicking off their season with Opening Day festivities at Heritage Park.

- The Road to Country Thunder event is Saturday, April 6th, from 5-10 p.m. in Historic Downtown Florence. Now in it's 5th year, this free event is made possible thanks to partnership with Country Thunder Music Festivals, the Greater Florence Chamber of Commerce, Pinal County Mounted Posse, American Legion Post #9 and many others. There will be four performers this year, with Harry Luge headlining the event. There will be a beer garden and numerous choices from our food vendors.
- Staff is also busy working on plans for the annual Eggstravaganza scheduled for Saturday, April 13th at Heritage Park. New this year will be the Pinal County Resources Fair for residents and visitors to view all the family resources available in Florence and Pinal County.

Program Updates

- Fourteen (14) teens and young adults went through Red Cross Lifeguard Certification over spring break. Another four (4) went through re-certification. Another course will be held in early May for those that could not attend. Certified lifeguards are eligible for summer employment at the Aquatic Center.
- The partnership with Arizona Fight Club for boxing/fitness classes at the Library and Community Center started off strong with 47 participants registered in March for the Boxing Bootcamp program.
- The yoga partnership is also going well, with 15 participants in different classes over the last two months. We anticipate continued growth in wellness classes in the future.
- Staff is exploring options for programming next school year after the announcement by the Florence Unified School District that there will be a new provider of after school programs. Ideas are focused on off-campus programming options for those parents that may not be able to afford the new provider fees on-campus.

Boards and Commissions

- Arts and Culture Commission
    - The Commission met on Thursday, March 14th.
    - The Commission hosted a few events over the past month.
        - The Florence Guitar Band held a free concert at the Suter House on Friday, March 8th. There were 74 guests and it was a full house!
        - The Commissioners are also hosting Fine Art for Teens, a free program, on Friday, March 15th and Friday, March 22nd, at the Suter House during spring break.
        - Commissioners and volunteers began painting on the Main Street Mural Project. The project is scheduled to be completed by the end of the month. The dedication will be held before the Road to Country Thunder event on Saturday, April 6th at 4:30 p.m.
- Youth Commission
    - The new Commission held their first meeting on Wednesday, February 27th. The Commission will hold regular meetings on the third Thursday of each month at 6:00 p.m. at the Library and Community Center.

The Florence Teen Council (FTC)

- Coordinated a successful Cupids Ball on Friday, March 15th at the Library and Community Center. 103 middle school students attended the first-time event.
- Coordinated the 3rd Annual 2019 Teen Leadership Symposium (below, left). There were 45 attendees, including students from other teen groups. There were three speakers and one keynote speaker.
- Participated in the first Community Kickball Event (below, right) on Friday, March 8th at Heritage Park. The FTC provided music/entertainment and served food after the games were over.
- Had a BBQ at South Pointe High School in Phoenix with another teen leadership group and then went to the Phoenix Suns game on Wednesday, March 13th during FUSD spring break.

Parks and Recreation Department
Divisions Report
February 2019

Recreation/Aquatics/Special Events Programs

Recreation Programs	Participants	Revenue	Notes
B&A Bell – Anthem	20	$1,030	
B&A Bell – Florence	32	$1,760	
Drop-In B&A Bell	3	$30	
Pickleball Lessons			Free Program
Open Studio	4		Free Program – Arts & Culture
Drum Circle			Free Program – Arts & Culture
Guitar & Cello Lessons	29		Free Program – Hermalene
Strings of the Sonoran	74		Free Concert
Coach Pitch	24	$805	
Soccer	21	$890	
Futsal	2	$0	
T-ball	58	$2,050	
Flow Yoga Evening	3	$120	
Introduction to Yoga	3	$40	
Restorative Yoga	2	$50	
Father/Daughter Gala	39	$546	
Home Tour	1,000	$	Special Event
Quick Draw	8	$250	

Facility Use Permits

Number of Facility Use Permits	Number of Bookings	Estimated Number of Participants	Revenue Generated
73	206	4,928	$872.50

Fitness Center – Membership Package

Fitness Package	Sales	Renewals	Total	Revenue
Adult Annual				
Adult Monthly	21	42	63	$1,260
Adult Six Months				
Employee Membership	8	3	11	Free
Green Tree Inn	25	1	26	Billed thru A/R
Senior Annual		1	1	$132
Senior Monthly	5	29	34	$481
Senior Six Months		1	1	$66
Youth Monthly	4	2	6	$78
Youth Six Month				$
Drop-In Fitness	12		12	$72
Total Memberships	**75**	**79**	**154**	$2,089

Fitness Center Classes

Program	Resident	Non-Resident	Revenue	Notes
Silver Sneakers Classic			$0	
Silver Sneakers Classes			$0	
Optum Fitness			$0	

- Estimated member sign-ins throughout the month: 1,241
- Total membership packages sold: 154
- Fitness Center revenue for membership package sales: $2,089
- Fitness Classes revenue: $
- Total Revenue: $2,089

Miscellaneous Revenue

Product	Total	Revenue	Notes
Paper & Markers		$	
150th Mug		$	
Drop in Yoga	4	$40	
Replacement Key FC	5	$5	
Replacement Key AC		$	
Swim Diapers		$	

Dorothy Nolan Senior Center

Activity	Monthly Total
Anthem Pharmacy	07
Angel Care Discussion	07
Back Space 3, Yahtzee, Skip Bo, Dominoes, Cards, Cribbage, Phase 10, Wii Bowling, Bunco-12, Pool	172
Bingo-110 – Steward Health19	129
Birthday Cards	06
Bible Study	10
Breakfast	205
Angel Care -In Service	07
Blood Pressures – Florence Fire	0
Building Use	944
CAHRA	16
Crafts- with Doris - Jewelry-8 Creations & Libations-2 Art-3	13
Coolidge Shopping	11
Computer Use	14
Diabetic Presentation by:	
Dinner Date –Palomino's	08
Dollar Store	05
Dental Clinic	42
Exercise with Rhoda - Pizzazz, - Hand weights and walk a mile, Dining Room	39
Extension Food Program	09
Fitness Center	14
Grief Support	15
Guardian Angel Installation	3
Hair Cuts by Mary Helen	0
Healthy Eating by Lou	07
Home Delivered meals –	248
Knit/Crochet Club	0
Lost Meals	20
Medicare Advocate Benefits (Open Enrollment)	0
Movie & Popcorn	09
Music by Rudy/ 25 Music with Hermalene- 209 Coffee Tyme Players58 Thy - 20	370
Senior Donation Account Meal Participant -Safeway Anthem- Fudge Shop	21
Senior Hot Topics	25
Staff Cooked meals & senior meal 94/21	115
Volunteer Hours	245
Wii bowling /Volleyball	20

Accomplishments:

The Center served 360 meals to participants. We had 6 new senior participant this month. Rides were provided for 272 riders, 90 trips to the Center, 16 errands.
We traveled a total of 1226 miles. The Give A Lift Program had 7 volunteers who delivered 30 medical transportation trips to 7 participants resulting an additional 850 miles and 46 additional volunteer hours.

Yard Sales-05, CAC Trips- 4 Brother's-17, Highway Clean-up – 11, Talent Show/Valentine Party- 44 (9Acts) Alzheimer's Support -05 FHS Retail Store- 14 Country Store -5 Smart Driving Class- 13 Pony Express- 13

Florence Community Library
February 2019

February Statistics

- 14,238 total items were circulated in February.
- 95 library cards were issued
- 952 patrons signed up for use of the computer lab computers
- 2,312 wireless sessions were held
- 92 person(s) attended 14 program(s) presented by the library

February Activities

2/01/19 AZ Humanities Presentation: Celebrities, Artists, & Good Places to Drink
2/02/19 February Library Movie
2/04/19 Librarian Gloria Moreno attended NASA STEM Workshop
2/05/19 Librarian Gloria Moreno attended NASA STEM Workshop
2/05/19 Family Storytime
2/06/19 Book Club
2/07/19 'Tween Code Club
2/08/19 Family Craft
2/11/19 Library Manager Jasper Halt attended a meeting of the Business and Education Committee.
2/12/19 Family Storytime
2/14/19 'Tween Code Club
2/19/19 Family Storytime
2/20/19 Family Flick
2/21/19 'Tween Code Club
2/26/19 Family Storytime
2/27/19 "Color Me Puzzled" Adult Coloring
2/27/19 Librarians Gloria Moreno and Kaytlin Nolan participated in FK-8's Bingo for Books
2/28/19 'Tween Code Club

Summer Reading 2019

As summer is fast approaching, planning is under way for the upcoming and always popular Summer Reading Program. This year's national theme is a "Universe of Stories," with this thrilling theme comes a vast amount of possibilities for crafts, Storytimes and programming which will incorporate STEM throughout the six week program. Kicking off May 28, this summer is sure to hold something for all ages at the library.

Spotlight: WiFi Site Leader

17,672 separate WiFi sessions were logged from July – February at the Florence Community Library. The Florence Library and Community Center represents the #1 most-used Pinal County Library District (PCLD) WiFi site. We have held this position in

Pinal County for all of 2018 and are continuing this trend in 2019. In comparison, Eloy is the second most used site, with 12,093 WiFi sessions for the same time period – showing that the Library and Community Center WiFi is a resource much-used by the public!

COURT FINANCIAL REPORT

February 2019

IRENE ENRIQUEZ – Court Administrator

DISTRIBUTION TYPE	FEBRUARY 2019 (CURRENT)	FEBRUARY 2018 (LAST YEAR)
FINE, FEES, & TRAFFIC	14,262.40	14,866.50
STATE SURCHARGES	8946.72	8,106.08
STATE JCEF	519.92	511.55
LOCAL JCEF	279.92	275.45
STATE FINES	2723.56	578.20
FLORENCE POLICE FUND	1067.73	790.67
RESTITUTION	710.84	153.03
BONDS	394.00	1,626.00
PUBLIC DEFENDER FEE	257.25	401.56
JAIL HOUSING FEES	1,985.06	2,577.96
JUSTICE COURT FEES	49.94	49.69
GENERAL FUND	0.00	294.03
FARE SPECIAL COLLECTION FEE	1318.50	1,548.15
FARE DELINQUENCY FEE	562.55	544.74
VICTIMS RIGHTS ENFORC.	127.30	97.36
PCSO FUND	0.00	0.00
OVERPAYMENT REFUND	*0.00*	*18.08*
COUNTY REVENUE	49.94	49.69
STATE REVENUE	14,198.55	11,386.08
TOWN REVENUE	17,852.36	19,224.25
RESTITUTION AND BONDS	1,104.84	1,779.03
TOTAL MONTHLY REVENUE:	**$33,205.69**	**$32,439.05**

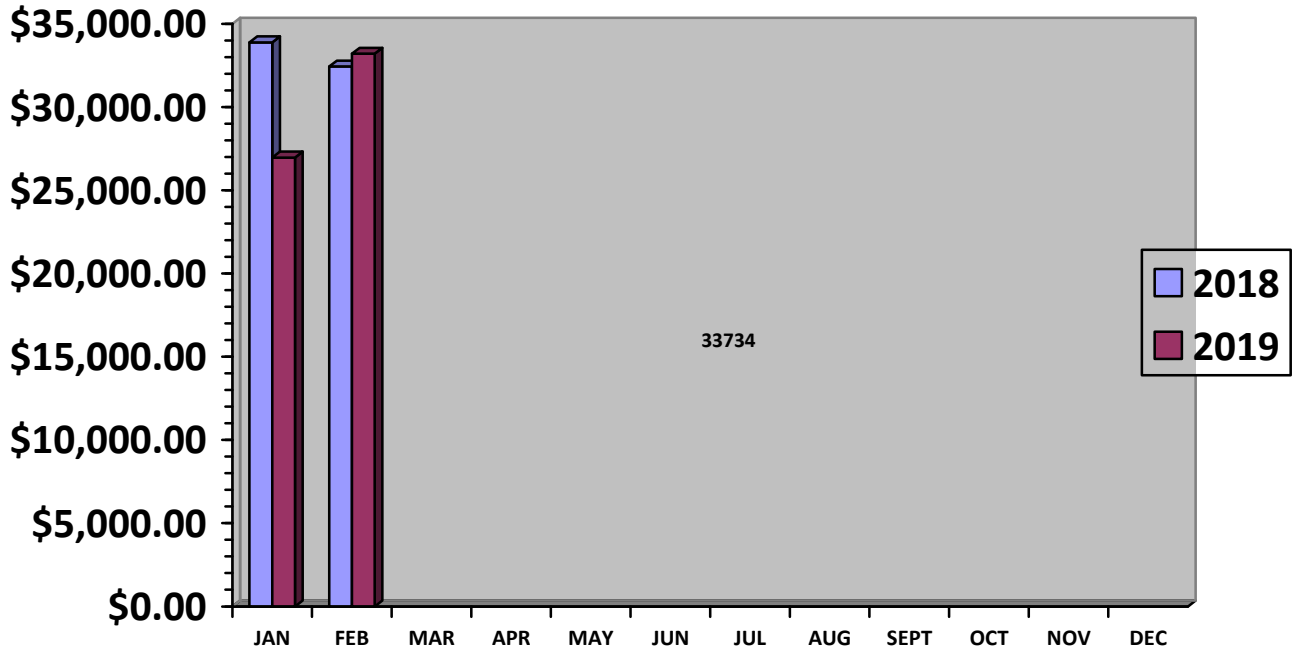

2.3% Increase from 2018

COMPLAINTS AND CITATION FILED

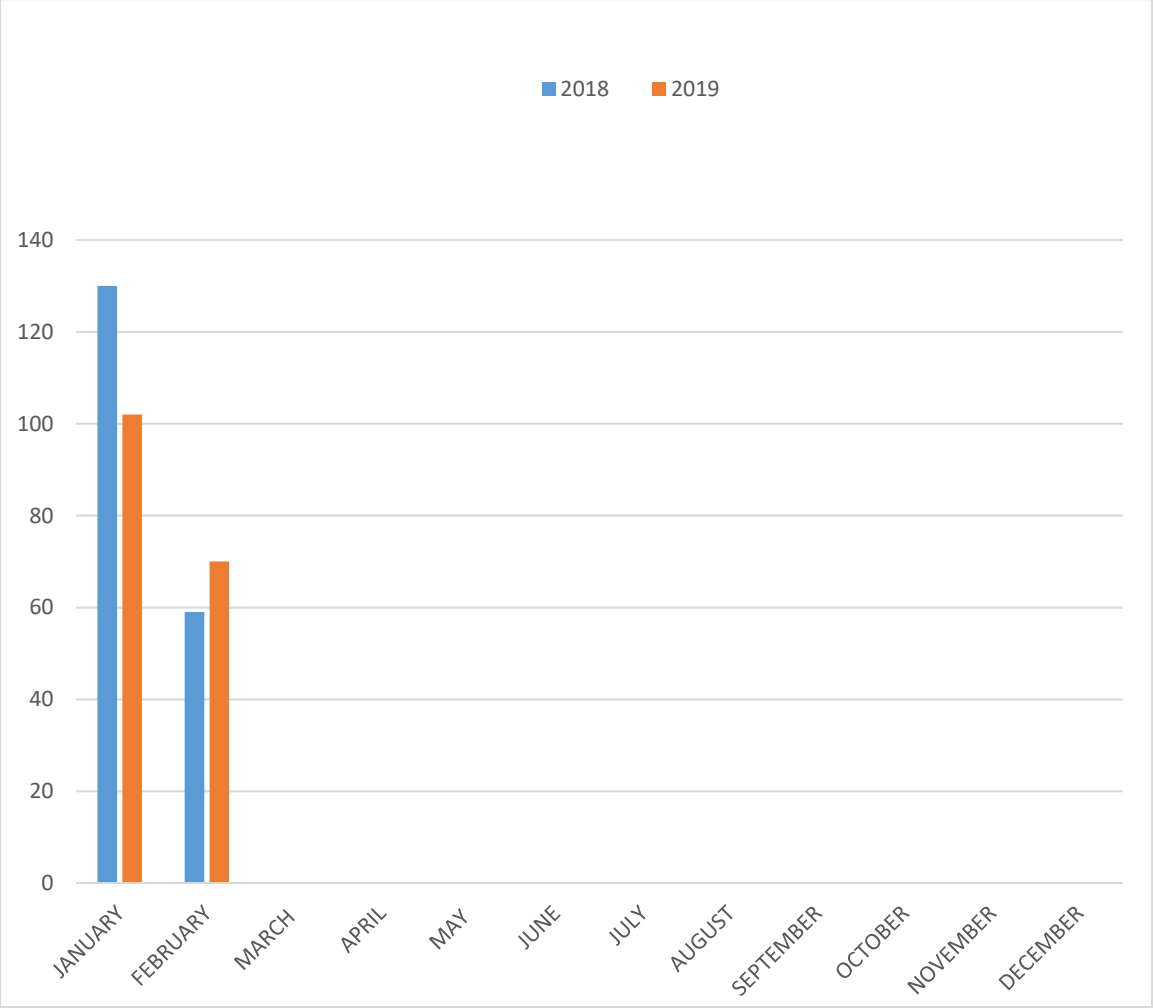

	JAN	FEB	MAR	APR	MAY	JUN	JUL	AUG	SEPT	OCT	NOV	DEC
2018 –	130	59										
2019 –	102	70										

CITATION BREAKDOWN

Below are the types of cases filed for the month of FEBRUARY 2019

CIVIL TRAFFIC VIOLATIONS	-	55
MUNICIPAL CODE	-	0
CRIMINAL TRAFFIC	-	5
CRIMINAL	-	7
DUI	-	3
DOMESTIC VIOLENCE	-	0

Finance Department

Memo

To: Honorable Mayor and Town Council
Brent Billingsly, Town Manager
Lisa Garcia, Deputy Town Manager

From: Rebecca Jimenez, Interim Finance Director

Date: March 21, 2019

Re: Finance Department Report

Finance Department Update

Annual Audit

Finance staff is currently working on closing out the annual audit and Comprehensive Annual Financial Report for fiscal year 2017/2018. The document is in final review phase and must go through two reviews within the audit firm.

Finance Reports

The financial report for the General Fund indicates revenues are strong and covering expenditures. The Enterprise funds continue to cover their obligations and the Highway User fund indicates the ability to cover costs associated with operations and maintenance and capital projects.

I have included a breakdown or revenues and expenditures by category for your review. Also reported are the Development Impact Fee Funds.

Budget

The Budget Committee has met this week and substantial progress was made. We are going to be fine-tuning the information discussed and will schedule work sessions to discuss the budget results and projects in the near future.

Memorandum

Date:

To: **Brent Billingsly, Town Manager**
Lisa Garcia, Deputy Town Manager

From: **Becki Jimenez, Deputy Interim Finance Director**

Subject: **Departmental Report - February 2019**

The month of February represents 67% of the fiscal year. The following chart compares the FY 2018-2019 actual revenue and expenses to the budget amounts for the Town's major Funds. Expenditures posted into the current month do not always reflect current month expense. Expendiutures run 30 to 45 days in arrears.

Major Fund Position

Fund Name	Year to Date Revenue Actual FY 18-19	Revenue Budget FY 18-19	% Actual to Budget	Year to Date Expense Actual FY 18-19	Expense Budget FY 18-19	% Actual to Budget
General	$9,887,009	$15,229,790	64.92%	$9,009,387	$15,185,620	59.33%
Capital Improvement	$720,721	$1,230,000	58.60%	$351,171	$1,457,640	24.09%
Highway Users Tax	$1,934,857	$3,238,310	59.75%	$2,431,850	$7,966,495	30.53%
Construction Tax - 4%	$52,530	$161,000	32.63%	$0	$0	0.00%
Town Water	$2,632,797	$3,045,080	86.46%	$2,353,674	$4,276,360	55.04%
Town Sewer	$2,511,976	$3,861,650	65.05%	$2,342,042	$7,823,320	29.94%
Sanitation	$608,785	$864,700	70.40%	$610,988	$841,290	72.63%
Total	$18,348,673	$27,630,530	66.41%	$17,099,113	$37,550,725	45.54%

General Fund Review

General Fund Revenue	YTD Amount	Budget	% to Budget
Taxes	$ 2,752,318.98	$ 4,040,000.00	68.1%
licenses and permits	$ 511,752.26	$ 748,900.00	68.3%
Franchise Fees and Taxes	$ 318,020.53	$ 584,640.00	54.4%
Intergovernmental	$ 4,593,557.29	$ 7,325,680.00	62.7%
Civil Engineering Inspection	$ 65,324.75	$ 63,800.00	102.4%
Civil Engineering Fees	$ 38,025.00	$ 80,000.00	47.5%
Community Development	$ 119,384.44	$ 171,060.00	69.8%
General Government	$ 43,444.53	$ 250,470.00	17.3%
Cemetery	$ 9,742.00	$ 17,100.00	57.0%
Police	$ 17,957.26	$ 28,050.00	64.0%
Parks & Recreation	$ 111,185.64	$ 146,300.00	76.0%
Fines & Forfeitures	$ 114,944.90	$ 172,000.00	66.8%
Investment Earnings	$ 25,072.25	$ 30,000.00	83.6%
Fire	$ 46,639.14	$ 48,270.00	96.6%
Library	$ 3,464.25	$ 5,300.00	65.4%
Miscellaneous	$ 214,009.93	$ 34,320.00	623.6%
Downtown Redevelopment	$ 855.97	$ 1,500.00	57.1%
Government Access Channel	$ 1,824.00	$ 4,000.00	45.6%
Seniors	$ 14,106.73	$ 15,900.00	88.7%
Transfers In	$ 895,279.28	$ 1,391,780.00	64.3%
Total	**$ 9,896,909.13**	**$ 15,159,070.00**	**65.3%**

General Fund Expenditures			
Administration			
Mayor and Council	$ 79,206.47	$ 151,680.00	52.2%
Administration	$ 416,100.63	$ 636,420.00	65.4%
Courts	$ 140,980.96	$ 221,590.00	63.6%
Legal	$ 552,858.68	$ 339,210.00	163.0%
Finance	$ 467,034.80	$ 811,290.00	57.6%
Human Resources	$ 160,658.55	$ 255,900.00	62.8%
Community Development	$ 368,472.33	$ 696,740.00	52.9%
Information Technology	$ 294,864.76	$ 489,120.00	60.3%
General Government	$ 237,567.87	$ 1,084,155.00	21.9%
Economic Development	$ 95,484.82	$ 150,705.00	63.4%
Public Safety			
Police Services	$ 2,297,550.99	$ 3,827,250.00	60.0%
Fire Services	$ 2,082,339.31	$ 3,318,160.00	62.8%
Community Services			
Community Services	$ 1,385,649.78	$ 2,487,300.00	55.7%
Community Development			
Engineering	$ 22,217.26	$ 149,260.00	14.9%
Facilities Maintenance	$ 310,380.32	$ 449,500.00	69.1%
Cemetery	$ 4,801.19	$ 8,900.00	53.9%
Fleet Maintenance-General Fund	$ 92,731.82	$ 152,610.00	60.8%
Interfund Transfers			
Transfers Out	$ 486.42	$ -	0.0%
Total Expenditures	**$ 9,009,386.96**	**$ 15,229,790.00**	**59.2%**

Development Impact Fee Report

Development Impact Fees	Revenue	Use	Cash Balance
Sanitation	$ 1.10	$ 2,389.54	$ 14,913.39
Transportation	$ 109,691.35	$ 2,389.54	$ 931,932.74
Police	$ 92,919.29	$ 2,389.54	$ 770,244.46
Fire	$ 95,371.05	$ 2,389.54	$ 350,861.48
Parks	$ 11,336.00	$ 2,389.54	$ 15,494.12
Library	$ 31,059.00	$ 2,389.54	$ 106,733.69
Total Development Impact Fees	**$ 340,377.79**	**$ 14,337.24**	**$ 2,190,179.88**

Fire Department

M E M O R A N D U M

DATE: March 5, 2019

TO: Brent Billingsley, Town Manager

FROM: David Strayer, Fire Chief

SUBJ: Summary of February 2019 and Plans for March 2019

The fire responses for 2019-2017 are as follows:

March 2019	Location of Calls					
Type of Calls	*Florence Proper*	***Florence Gardens***	*Anthem*	*Prisons*	*Mutual Aid*	*Totals*
Brush Fires	0	0	0	0	0	0
Structure Fires	1	0	1	0	0	2
Vehicle Fires	0	0	0	0	0	0
Trash Fires	1	0	0	0	0	1
EMS	**59**	23	**42**	**61**	**2**	**187**
HazMat	2	**0**	3	0	0	5
Electrical Arching	0	0	1	0	0	1
Police Asst./Public Asst.	2	5	9	0	0	16
Unauthorized Burning	0	0	0	0	0	0
Good Intent	0	0	0	0	0	0
Controlled Burning	0	0	0	0	0	0
False Alarm/System Malfunction	5	0	4	0	0	9
Emergency Stand by (move up)	4	0	44	0	3	51
Other Calls	4	2	6	5	0	17
TOTALS	**78**	30	**110**	**66**	**5**	**289**

Three Year View	2019		2018		2017	
	Feb	YTD	**Feb**	*YTD*	**Feb**	*YTD*
EMS	**187**	**366**	**118**	**273**	**173**	**345**
Fire Calls	**3**	**8**	**2**	**6**	**1**	**6**
All other Calls	**99**	**166**	**59**	**142**	**130**	**233**
TOTALS	**289**	**540**	**179**	**421**	**304**	**584**

Summary of February

Fire Chief Report

- Attended February Town Council Meetings
- Recognized Captain Bill Bruin for his completion of the National Fire Academy's Managing Officer Program at the February 4th Town Council meeting
- Attended February Management Team Meetings
- Conducted weekly Fire Staff meetings
- Completed the Battalion Chief testing process
- Attended a meeting on abandoned buildings February 1st
- Attended a meeting on the Downtown Historic District February 1st
- Participated in a roundtable discussion on the opiate problem with the Town Manager, Police Chief and County Attorney on February 8th.
- A Local Emergency Planning Committee meeting was conducted on February 7th.
- Attended a meeting on the Pinal County Tax Auction process on February 11th.
- Attending a meeting regarding the First Net public safety system on February 11th
- Attended a one-day seminar in Mesa on February 12th regarding legal issues in the fire service and social media challenges in public safety agencies
- Conducted a meeting with Life Net regarding an incident that occurred during the Prison Run event
- Attended a pre-demolition walk-through of the Kokopelli building February 14th
- Participated in a discussion regarding annexations with Town Staff on February 14th
- Participated in multiple personnel-related meetings during the month of February
- Attended a meeting with Spherium on February 21st
- Attended a meeting with Fire Trucks Unlimited, a fire apparatus restoration company on February 22
- Conducted a meeting with American Medical Response on February 22nd
- Successfully completed an audit by the Department of Health Services

Division Report – Administration

Incidents

- Anthem Grill — CO2 alarm activation. (Improper beverage transfer)
- Circle K — CO2 Activation (Improper handling of CO2 sensor & power source.)
- 1850 Diversion Dam — Structure Fire (Under Investigation)

Threat Vulnerability Assessment Program

- TVA Town Hall
- TVA PC Superior Courts

Plan Reviews

- FUSD K-8 Fire Alarm System — Community Development
- Town Fire Line Project — Public Works

Special Event Permit Review and Inspections

- Multiple Event Reviews

Life Safety Inspections

- Anthem Grill — Co2 inspection
- Terra Del Sol — Life safety
- Pinal County Historical Museum — Life safety

Meetings

- Code Assessment 110 Willow — Community Development
- Addressing Project — GIS Department
- Code Adoption — Community Development
- Florence Gardens Code Compliance Meeting — Club House
- Terra Del Sol Code Compliance Meeting — Club House
- Pinal County Attorneys New Development Fire Lane — Community Development
- New Tenant Proposal 130 s Main — Community Development
- Anthem Hospital Fire Access — Site Tour
- Anthem Hospital DOC egress and security
- Community Emergency Response Team CERT Meeting — Station 1
- Threat Assessments — Florence PD

Training

- On-Line Fire Protection Systems

Special Assignments and Projects

- Wireless Fire Alarm Project-On going
- TLO Updates
- Code Amendment Project updates
- Town FEE Updates
- PC Active Shooter Planning Project
- Web site update project
- Engine Company-Response Guide and Safety Survey project (training)
- Existing Building Safety Surveys
- Burn Permit Procedures
- FD-Training and development

Division Report – Operations

Apparatus

- Pierce Recall on Aerial Command Zone, Superstition Mechanics working to coordinate fix, all Crews updated on safety procedures.
- TRV-541 Scheduled for maintenance for Country Thunder Readiness
- Both Battalion Trucks Replaced Batteries by TOF Maintenance
- B542 new tire due to Flat by TOF Maintenance

Uniforms/Personal Protective Equipment (PPE)

- No PPE Sent for cleaning,
- Working with FF Calise on Turnout Tracking

Communications Equipment

- AVL Moved From R-541 to E-541 to Complete AVL Identifiers for Station 1 equipment. Working on Station 2 Equipment with IT to Figure out Problems

Emergency Medical Services (EMS)

- DHS Audit Complete
- Tracking System for Narcotics and Drug Box Checkoffs approved by EMS Committee and in use

- 2 Newer Generation LifePak 15 Monitors Placed in Service Due to Recall on Defibrillation Failures. Working with LifePak on Software Updates.
- Medications Restocked from Mt. Vista

Fire Investigation Reports Reviewed

Incident Number	Incident Date	Incident Address
240972	**1/23/2019**	**7549 W. Rushmore**
241451	**1/29/2019**	**Felix / AZ Farms**

Training

- 6 Captains Attended Response to Strip Mall Fires Training at Tempe Training Center
- Crews Asked to Review Swift Water Operations with Heavy Prolonged Rain Periods

Special Projects

- Utility Truck Equipment List Being Formulated by FF Adamczyk
- CERT Team meetings to plan for implementation Meetings Scheduled for 3/30 at Community Center, Florence Gardens, Sun City, and Parkside
- Fliers Distributed For CERT
- SCBA compressor cascade maintenance for breathing air

Town Committees

- Health and Safety
- Grants
- Timekeeping and paperless review
- Initiatives, rewards, and recognition
- Emergency Communications
- Public Safety Planning Group

Public Education and Community Risk Reduction

United States Fire Administration
U.S. Department of Homeland Security
16825 South Seton Avenue
Emmitsburg, Maryland 21727

FEMA

February 6, 2019

Florence Fire Department
Attn: Dave Strayer, Chief
PO Box 2670
Florence, AZ 85132

Dear Chief Strayer:

Thank you for supporting William Bruin during their commitment completing the U.S. Fire Administration's National Fire Academy's (NFA) "Managing Officer Program" (MO) Program. William has successfully completed all the requirements of the MO Program.

This accomplishment represents William's dedication to personal and professional excellence, and commitment to enhance their department and community. The enclosed MO program certificate is provided to you for a formal presentation to recognize William Bruin. This can be an ideal way to celebrate your department's commitment to its community, while demonstrating the success of your members, by inviting elected officials, local media, and William's family to celebrate this important achievement.

I appreciate and thank you for your support of this two year program and of the NFA.

Sincerely,

Tonya L. Hoover
Superintendent
National Fire Academy
U.S. Fire Administration

Enclosure

Tender Thoughts

19264005

0 67008 77407 4

4649814

$1.95 TETY54057-00D

TENDER THOUGHTS GREETINGS
1920 MATHESON BLVD MISSISSAUGA, ONTARIO L4W 0B3
©AGC, LLC MADE IN U.S.A.

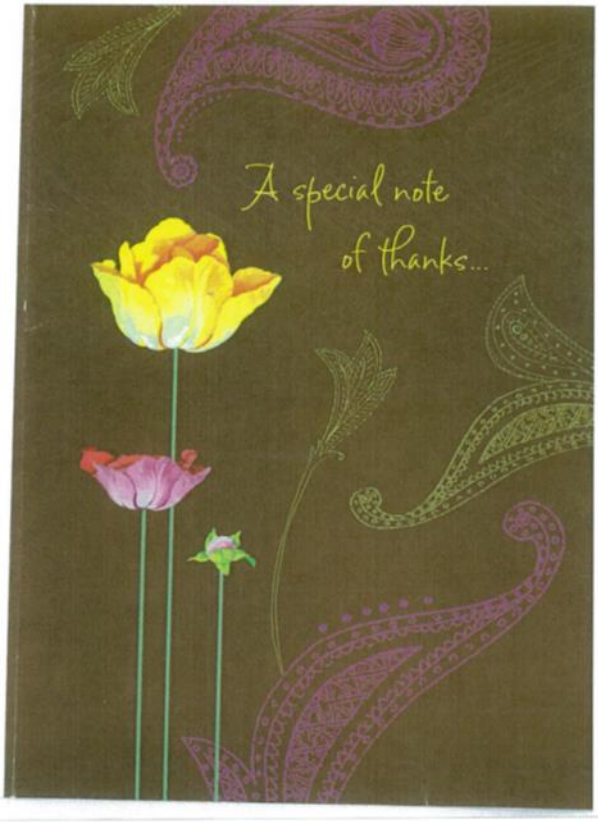

A couple of weeks ago, I believe on Jan. 29, I told my housemate, "can't breathe, call ambulance". That was my last memory until I awakened in the ER.

Bruce said you got here right away and knew exactly what to do.

Thank you from both of us. I would love to meet the people who came to my rescue when I feel stronger.

...straight from my heart.

Thank you for more days.

Jerri

Jerri Koehn
157 N. Park St.

Classics and Customs Car & Bike Show February 16, 2019

Plans for March

- Announce Battalion Chief Selection
- Conduct a recruitment process for the formation of a Community Emergency Response Team (CERT)
- Begin a recruit academy for the Part-time/Reserve Firefighter program
- Prepare for Country Thunder
- Attend an All-Hazards Incident Management Team course March 18-22

FLORENCE POLICE

Monthly Report – February 2019

Daniel R. Hughes, Chief of Police

425 N. Pinal St. ▫ P.O. Box 988

Florence, AZ 85132

Phone: 520-868-7681 ▫ Fax: 520-868-0158

"The men and women of the Florence Police Department stand firm in our pursuit for justice and public trust. We will stay true to our mission of providing service and safety to our community with honor, respect, and integrity. We are committed to providing fair and equal treatment to those we encounter."

The information contained in this report outlines significant information and activity within the Florence Police Department (FPD) during the month of February 2019. The monthly report is prepared for the Town Council's review and furthermore for the use by FPD to examine the current activity within the department and community to identify short-term and long-term needs, and develop plans for improvement to provide the highest level of service.

Personnel

Employee	Position	Effective
New Hire		
None		
Resignations/Terminations		
None		
Vacancies		
2	2- 1 Supervisor, 1 Officer	
1	Full-time Dispatcher	Open continuous

Chief of Police

Chief of Police, Daniel R. Hughes attended the following meetings during the month of February:

- Town Council Meetings
- Management Team Meetings
- Weekly FPD Administrative Meetings
- Purchasing Committee Meeting
- Fire and Police Communication Meeting
- Alliance to Combat Transnational Threat – Field Area 2 (ACTT FA-2) Planning Meeting
- Pinal County Law Enforcement Association (PCLEA) Meeting

Administrative/Support Services

The Support Services area includes the following: Communications Division, Evidence and Property, Crime Scene Investigator, Records Division, and Departmental Budget/Finances.

The Support Services Manager (Deanna Husk) had the following monthly activities:

- Budget review
- Purchase card review/coding
- Employee evaluations
- Preparation for Bi-Annual Evidence Audit
- On-going review of policies/procedures
- Review/Distribution of Monthly Report
- Review/Preparation of Strategic Plan
- Review of Laserfiche Project

Communications

The Dispatch Supervisor had the following monthly activities:

- 1 full-time position vacant
- 2 Dispatchers in training
- Scheduling & testing new applicants
- Revision of draft policies & procedures
- Worked on Superior billing

Calls for Service

Below is a table that depicts the total calls for service handled by FPD dispatchers during the month of February. The numbers are shown by the incident locations and how the incident was reported.

How Calls Are Received, Totals by How Received				
	Beat 1	Beat 2	Beat 3	TOTAL
911 Line	40	9	33	82
Crime Stop Line	0	0	0	0
Officer Report	146	51	182	379
In Person	43	3	1	47
Radio Transmission	3	1	0	4
State TT/NLETS	0	0	0	0
Telephone	203	59	77	339
TOTAL	**435**	**123**	**293**	**851**

Average Response Time to Calls for Service

6 Month Reporting Period: September 2018 to February 2019

	Sep	Oct	Nov	Dec	Jan	Feb
Priority 1	4:50	5:13	5:35	5:20	5:39	4:50
Priority 2	6:00	7:15	8:09	6:05	6:28	7:12
Priority 3	26:14	21:10	25:55	24:04	25:21	16:30
Priority 4	26:53	3:01	None	4:48	None	None

Definitions:

Priority 1	These priorities are those in which there is an imminent danger to life or major damage/loss to property or an in progress or just occurred major felony.
Priority 2	These priorities are those in which a crime in progress might result in a threat of injury to a person, or major loss of property or immediate apprehension of a suspect.
Priority 3	These priorities are those in which there is no threat of personal injury or major loss of property.
Priority 4	These priorities are those of a report nature only.

FEBRUARY 2019 – Offense Count Index

Classification of Offense	Offenses Reported	Unfounded Complaint	Actual Offense	Offenses Cleared	Juvenile Clearance
CRIMINAL HOMICIDE	**0**	**0**	**0**	**0**	**0**
a. Murder/Nonneg Manslaughter	0	0	0	0	0
b. Manslaughter by Negligence	0	0	0	0	0
FORCIBLE RAPE	**0**	**0**	**0**	**0**	**0**
a. Rape by Force	0	0	0	0	0
b. Attempt Forcible Rape	0	0	0	0	0
ROBBERY	**0**	**0**	**0**	**0**	**0**
a. Firearm	0	0	0	0	0
b. Knife or Cutting Instrument	0	0	0	0	0
c. Other Dangerous Weapon	0	0	0	0	0
d. Hands, Fist, Feet, etc.	0	0	0	0	0
ASSAULT	**10**	**0**	**10**	**9**	**1**
a. Firearm	0	0	0	0	0
b. Knife or Cutting Instrument	0	0	0	0	0
c. Other Dangerous Weapon	0	0	0	0	0
d. Hands, Fist, Feet, etc.	3	0	3	5	0
e. Other Assaults – Simple	7	0	7	4	1
BURGLARY	**0**	**0**	**0**	**0**	**0**
a. Forcible Entry	0	0	0	0	0
b. Unlawful Entry/No Force	0	0	0	0	0
c. Attempt Forcible Entry	0	0	0	0	0
LARCENY – THEFT	**4**	**0**	**4**	**0**	**0**
MOTOR VEHICLE THEFT	**1**	**0**	**1**	**1**	**0**
a. Autos	1	0	1	1	0
b. Trucks	0	0	0	0	0
c. Other Vehicles	0	0	0	0	0
GRAND TOTAL	**15**	**0**	**15**	**10**	**1**
Clearance(s) by Adult Arrest	3				
Clearance(s) by Juvenile Arrest	1				

**All data presented in this report is tentative until monthly audit is complete

Property & Evidence

During the month of February 2019, there were 139 envelopes/packages involved in 78 incident cases submitted for processing by the Property and Evidence Section. Of the total, envelopes/packages:

- 77 were evidence items of which 4 were released, 61 were stored, and 12 out to lab and 1 was destroyed.
- 35 were safekeeping items of which 7 were stored and 28 were released.
- 7 were disposal items of which 7 were stored.
- 20 were found items of which 5 were stored and 15 were released.

The items of evidence involved the following crimes:

- 15 - Drug Incidents
- 0 - DUI

2019 – Property and Evidence Processing

TOTAL PACKAGES	EVIDENCE STORED	SAFE KEEPING	FOUND PROPERTY	DISPOSAL	RELEASED	OUT TO OFFICER	SENT TO LAB
139	80	35	20	7	47	24	12

Other Considerations

- The status of the Police Evidence Trust Fund bank account, involving $2,601.14.
  16 pending items:
  10 are for safekeeping/found property,
  5 are pending RICO forfeiture/Evidence,
  1 is to be returned to owner if located.

  Request to transfer funds from the trust fund to general fund were sent for the following cases:

F060315002	11/20/2008	$86.00
F16120271	6/30/2017	$12.00
F17040251	6/30/2017	$1.00
F18010889	1/19/2018	$450.00
F18020481	2/13/2018	$14.49
F18080162	8/6/2018	$0.50

- Fingerprints were taken for 29 citizens by the Property and Evidence Section and Police Volunteers this month. The prints included volunteers, employee applicants and private citizens.

Operations/Patrol

The Operations/Patrol Division is under the direction of Lt. Terry Tryon, and he has attended the following meetings during the month of February:

- Town Council Meetings
- FPD Management Team Meetings
- Weekly FPD Administrative Meetings
- Workflow Committee Meeting
- Alliance to Combat Transnational Threat – Field Area 2 (ACTT FA-2) Planning Meeting

Professional Standards

No complaints received.

No Internal Administrative Investigations initiated.

No use of force reports for February.

Criminal Investigations Unit

# of new cases assigned in February:		5	
Observed Offense	**Assigned Detective**	**Case Status**	**Notes:**
Sex Offense (Juvenile)	J. Ballard	OPEN	Suspect identified and interviewed waiting on victim's parent for a decision on whether to file charges
Sex Offense (Juvenile)	J. Ballard	Closed	Report from DCS (mandatory reporter) of inappropriate sexual behavior between siblings. Parent interviewed incident is being handled through counselling
Threatening	D. Helsdingen	Closed (TOT)	Gang threats against Arizona Department of Corrections employee being handled in town by FLPD and at his residence by Superior PD & PCSO
Narcotics	D. Helsdingen	Closed	A reported by a physician of fraudulent prescription being filed at Safeway in Anthem. Safeway pharmacist has no record of patient or prescription being filled
Domestic Violence	D. Helsdingen	Closed	Suspect arrested search warrant on cell phone completed
# of cases carried over into February:		**10**	
Observed Offense	**Assigned Detective**	**Case Status**	**Notes:**
Hit & Run	D. Helsdingen	OPEN	Witness came forward with information-report completed and forwarded Charges to PCA, PCA requesting additional investigation
Dangerous Drugs/Child Abuse	D. Helsdingen	Closed	Plea deal on both suspects-probation
Accident with Injuries (Hit & Run)	D. Helsdingen	Closed	Suspect and vehicle located search warrant on vehicle completed Victim does not remember accident has not decided to pursue charges medical records from victim obtained cases appears to be handle through civil attorneys
Sex Offense (PREA)	D. Helsdingen	Closed	Detainee reported being raped-SANE exam completed, Search Warrant for DNA done, detainer issued on suspect waiting on DPS report-suspect arrested on a $250,000.00 bond
Sex Offense	D. Helsdingen	OPEN	Victim returned from California-interviewed completed-workup on suspects sent to DPS Felony charges forth coming
Assault/Disorderly Conduct-fighting	D. Helsdingen	Closed	Prison case several suspects identified victim had minor injuries misdemeanor charges filed
Sex Offense (PREA)	D. Helsdingen	Closed	Inmate reported he was rape by four subjects. SANE examine completed buccal swabs obtained from suspects. Victim later admitted to lying. Received CAFCC packet
Sex Offense (PREA)	D. Helsdingen	Closed	Sex Assault Kit and CAFCC investigation determined unfounded
Sex Offense/Suspicious Act	L. Gaston	Closed	Unfounded victim's report was inconsistent with medical reported from Chandler Regional Hospital

Sexual Abuse	D. Helsdingen	OPEN	Confidential Felony Charging packet completed, and charges have been approved follow-up investigation continuing/ still waiting on call back from victim
# of joint cases worked in February:		**4**	
Observed Offense	**Assigned Detective Primary/Secondary**	**Case Status**	**Notes:**
Sex Offense (Juvenile)	L. Gaston/D. Helsdingen	Closed	Child disclosed/suspect invoked prior to questioning PCA declined charges
Homicide	D. Helsdingen/L. Gaston	OPEN	1st Degree Murder Charges Filed
Sex Offense (Juvenile)	L. Gaston/D. Helsdingen	OPEN	Several female subjects disclosed inappropriate sexual abuse. Grand Jury indictment currently in pre-trial status-possible change of plea to dismissed capacity
Sex Assault/Sex Abuse	L. Gaston/D. Helsdingen	OPEN	Reported long time sexual abuse from Illinois to AZ ending in Florence. Working with LE in Illinois search warrant on residence suspect arrested. Suspect rearrested on Agency Assist felony warrant from Illinois. Suspect currently in custody awaiting extradition. Images of Child pornography found on suspect's computer additional charges being filed

Other Activity:	
D. Helsdingen	OIS Training
D. Helsdingen	FA2 meeting
L. Gaston/D. Helsdingen	Meeting FHS mandatory reporting
D. Helsdingen	Grand Jury

Beat 1

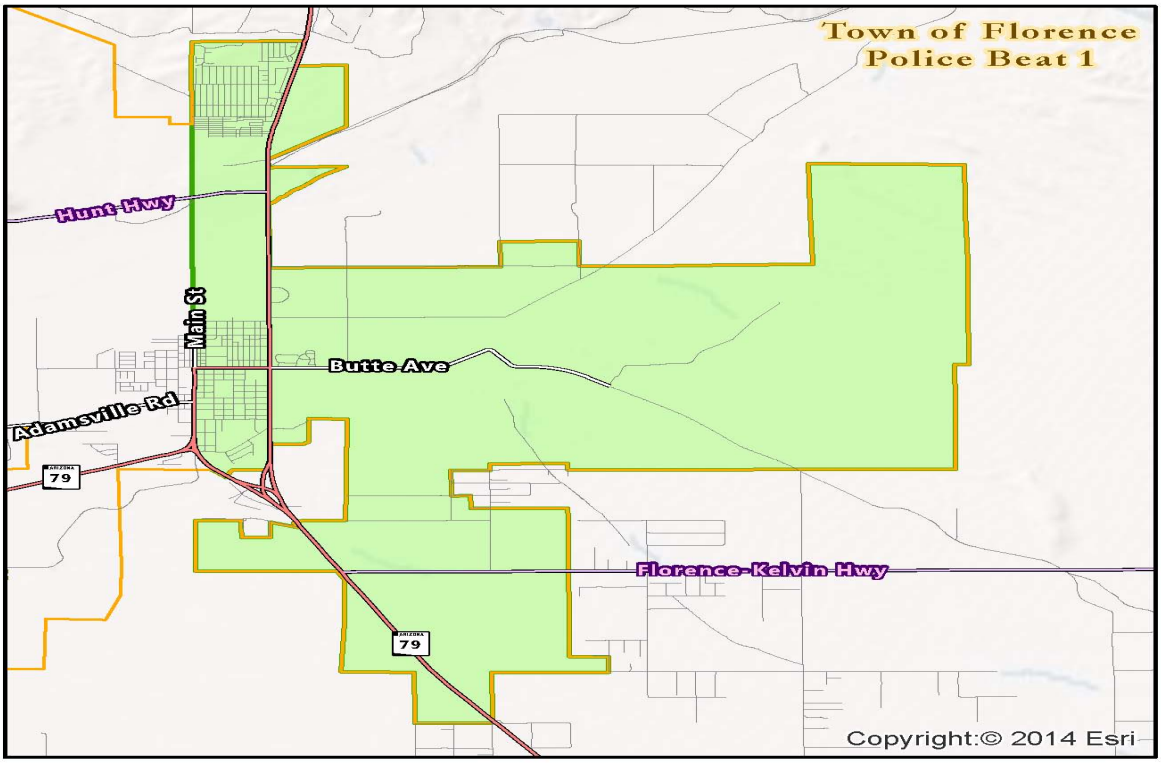

Beat Statistics:
Beat 1 Supervisor – Sgt. D. Peterson
There are 6 officers assigned to Beat 1
Total number of calls for service (including traffic): 417
Total number of traffic stops: 110
Total number of accident reports taken: 11, of which 5 were on private property
Total number of citations issued: 18 for 25 violations
Total number of DUI: 0

Crimes against Persons
Assault: 7
Sexual assault: 1

Property Crimes
Criminal damage: 2
Shoplifting: 1
Theft: 1

Monthly Activities
Total calls for service were down from last month (484). Person crimes (8) were down from last month (9). Property crimes (4) were down from last month (8). Six (6) of the reported index crimes (12) during this time period occurred in detention facilities. Officers in Beat 1 conducted directed patrols in the areas of previously reported crimes. Officers also conducted field

interviews of persons throughout Beat 1 and inquired if there was any knowledge of any crimes being committed. The directed patrols and field interviews were utilized to gather information / suspects and also to provide a presence in the community to help deter additional crimes. There were 24 warrant arrests in Beat 1 during the month.

In addition to normal patrol, officers also conducted 128 directed patrols of businesses, apartment complexes, Florence Gardens and Caliente communities and the prisons.

Community Involvement and Education
Area schools were open during the month. Officers continued their visits to schools and grounds to prevent and / or detect any crimes. Officers were also assigned to schools to monitor crosswalks and school speed zones.

Special Events
Historic Florence Home Tour 2019 took place on February 9th. The reported attendance was higher than previous years.

Florence Prison Run 2019 took place on February 10th. This was the Hells Angels 36th Annual Prison Run in Florence.

Upcoming Special Events
None

Significant Calls for Service
Sex Offense reported on S. Park Street – A teacher reported (third party) that two of her female students were playing dress up (not at school) and being videotaped by two boys from the same class. This case is under investigation.

Assault reported on E. Diversion Dam Road – Two juvenile male inmates were involved in a fist fight with each other. Charges have been forwarded to the court.

Assault reported on N. Pinal Parkway – During a medical transport, a male inmate spit two times on a Corrections Officer. The inmate then advised the officer that he has HIV. Charges have been forwarded to the court.

Assault reported on N. Pinal Parkway – One male inmate punched a second male inmate in the head causing a minor injury. Charges have been forwarded to the court.

Assault reported on N. Pinal Parkway – Awaiting information from the prison.

Assault reported on N. Pinal Parkway – A male responded to the gas station to pick up his wife upon her release from jail. When he told her that he was not supposed to have any contact with her she became angry. She then kicked him two times in his face and poured her soda over his head. She then drove away without him. Charges have been forwarded to the court.

Assault reported on N. Pinal Parkway – A former male inmate alleges that he was assaulted while incarcerated in September 2018. Charges forwarded for simple assault to the court.

Assault reported on E. Diversion Dam Road – Two juvenile male inmates were involved in a fist fight with each other, no injuries reported. The juveniles and their respective parents refused to proceed with pressing charges.

Theft reported on E. Stewart Street - A female agreed to sell a cell phone online for $725.00. She then mailed the phone to Macon, Georgia and awaited her PayPal payment. When no payment was received, she called the police. PayPal was unable to assist her due to there being no accounts in the other person's name. Local authorities in Georgia had no contacts or leads for any person(s) using the receiving party's information.

Shoplifting reported on N. Pinal Parkway – An unknown male entered the store and took a cigarette lighter valued at $1.78. He then fled the store on foot. Officers were unable to locate or identify the suspect.

Criminal Damage reported on E. Butte Avenue – A homeowner reported that an unknown person spray-painted graffiti on a brick wall of the residence. The word "HOME" was written. Photos were taken as evidence. The homeowner will prosecute if the suspect is identified.

Criminal Damage reported on E. 1st Street – An employee of Regional Pavement Maintenance reported that after they poured a new concrete sidewalk at this location, someone came along and wrote "NEAL" and "CKE" in the fresh pavement. There were also several shoe prints which were of a small size (indicating possibly children). The employee further stated they would try and buff out the damage but if it had to be re-done it would cost approximately $1500.00.

Accident reported on S. Main Street at Hwy 287 – A southbound vehicle was struck by an eastbound vehicle that had passed the stop sign. The at-fault driver was cited.

Accident Private Property reported on N. Jason Lopez Circle – Two cars in the court parking lot bumped each other. The drivers exchanged information.

Accident Private Property reported on E. Ocotillo Drive – A vehicle that was backing out of a driveway struck a parked vehicle. The drivers exchanged information.

Accident Private Property reported on N. Pinal Parkway – While in the prison parking lot, two vehicles bumped into each other. The drivers exchanged information.

Accident reported on S. Main Street at Hwy 287 – A southbound vehicle was struck by an eastbound vehicle that had passed the stop sign. The at-fault driver was cited.

Accident Private Property reported on N. Main Street – Two vehicles bumped into each other in the Post Office parking lot. The drivers exchanged information.

Accident Private Property reported on N. Jason Lopez Circle – Two vehicles bumped into each other in the court parking lot. The drivers exchanged information.

Accident reported on N. Pinal Parkway at the Gila Bridge – A male reported that as he crossed the Gila Bridge, he hit some ice which caused his vehicle to slide. He struck the guard rail and caused minor damage to his vehicle.

Accident reported on N. Pinal Parkway at Florence Blvd – A male reported that while he was driving northbound on N. Pinal Parkway he ran over some ice and his vehicle slid into the guard rail.

Accident reported on N. Pinal Parkway – A vehicle pulled out of the restaurant parking lot in front of northbound traffic. A northbound vehicle struck this vehicle causing minor damage. The at-fault driver was cited.

Accident reported on E. Diversion Dam Road – A male reported that while he was traveling westbound on E. Diversion Dam Road, he had to skid out of the way to avoid hitting a cow in the roadway. However, when he passed the first cow, he then drove into a second cow that was on the roadway. The driver was transported to the hospital for back and groin pain.

Training
Legal update training provided.

Beat 2

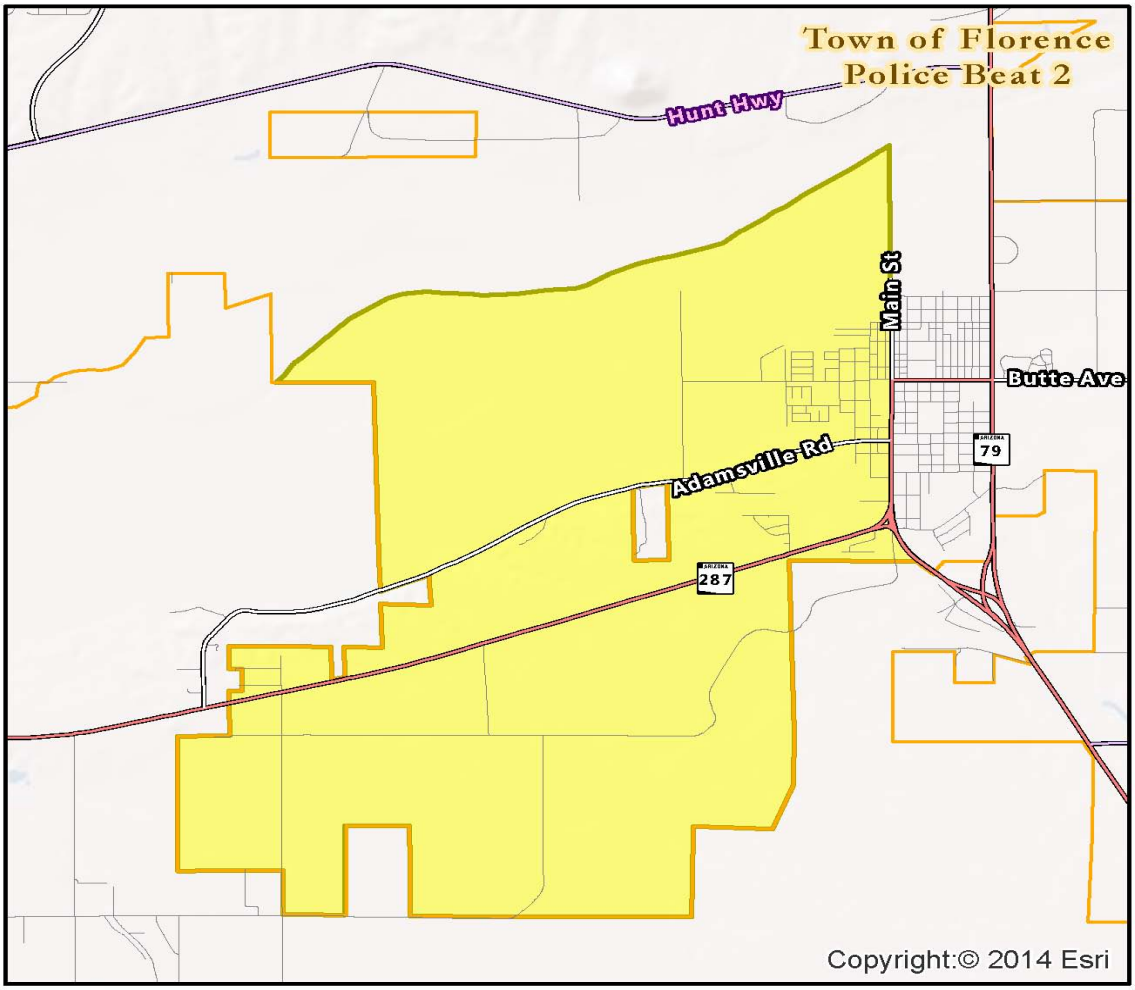

Beat Statistics
Beat 2 Supervisor – Sgt. D. Campbell
There are 6 officers assigned to Beat 2
Total number of calls for service (including traffic): 111
Total number of traffic stops: 24
Total number of accident reports taken: 1
Total number of citations issued: 8 for 9 violations
Total number of DUI: 0

Crimes against Persons:
Assault: 1
Sexual assault: 2

Property Crimes:
None

Monthly Activities
During the month of February, crime decreased in the area of thefts and criminal damage calls for service. Due to multiple arrests, no current cases of theft's or burglaries have been reported. FPD increased directed patrols and conducted various field interviews during the month

Citations were issued for speeding, expired registration, vehicles not having mandatory insurance, passing a stop sign and driving without a license.

Community Involvement and Education
Officers conducted 29 directed patrols of the local business and issuing warning citations for parking violations (2) to include (2) Field Interviews. FLPD has been conducting stationary surveillance on various locations to determine narcotic activity. Beat #2 Officers conducted 14 separate investigations regarding suspicious activity.

Special Events
Main Street Car Show. A large crowd turned out with no calls of service reported.

Upcoming Special Events
None

Significant Calls for Service
Sex Offense: FPD responded to Florence High School (FHS) on South Main Street in reference to a sex offense. During the investigation, a male subject inappropriately touched two female students in their private parts while clothed. As the investigation continued, FHS Staff was still determining if the juvenile would be suspended. FPD is continuing with the investigation as contact still needs to be completed with the male subject for a statement.

Assault: FPD responded to FHS on South Main Street in reference to an assault. During the investigation, a male subject hit a female three times. During the investigation, the female subject had an old picture of the male claiming he was gay as he was hugging another male. The female threatened to post the picture on social media unless the male openly admitted that he was gay. At the conclusion of the investigation, both students were suspended, and charges submitted to Florence Magistrate for assault, disorderly conduct and harassment.

Theft: FPD responded Family Dollar located on West Highway 287 in reference to a theft. FPD arrived on scene and contacted the store manager and two female subjects leaving the store. During the investigation the alleged suspect was placing things in her purse as she was shopping. She eventually for all items but forgot about magnets located in the bottom of her purse. The female was advised it's illegal to conceal items within a purse with the intent to not purchase all items. This case was closed without charges per the store manager.

Sex Offense: FPD responded to FHS on South Main Street in reference to a sex offense. During the investigation, a female subject was providing fellatio to two different students and was bragging about it. FPD intervened as there was allegedly an 18-year-old student involved, as the female is only 15 years of age. This case is still under investigation by FPD's Detective Division.

Training
Officers were provided information on local events to including providing them with daily briefings on recent intelligence and training videos.

Beat 3

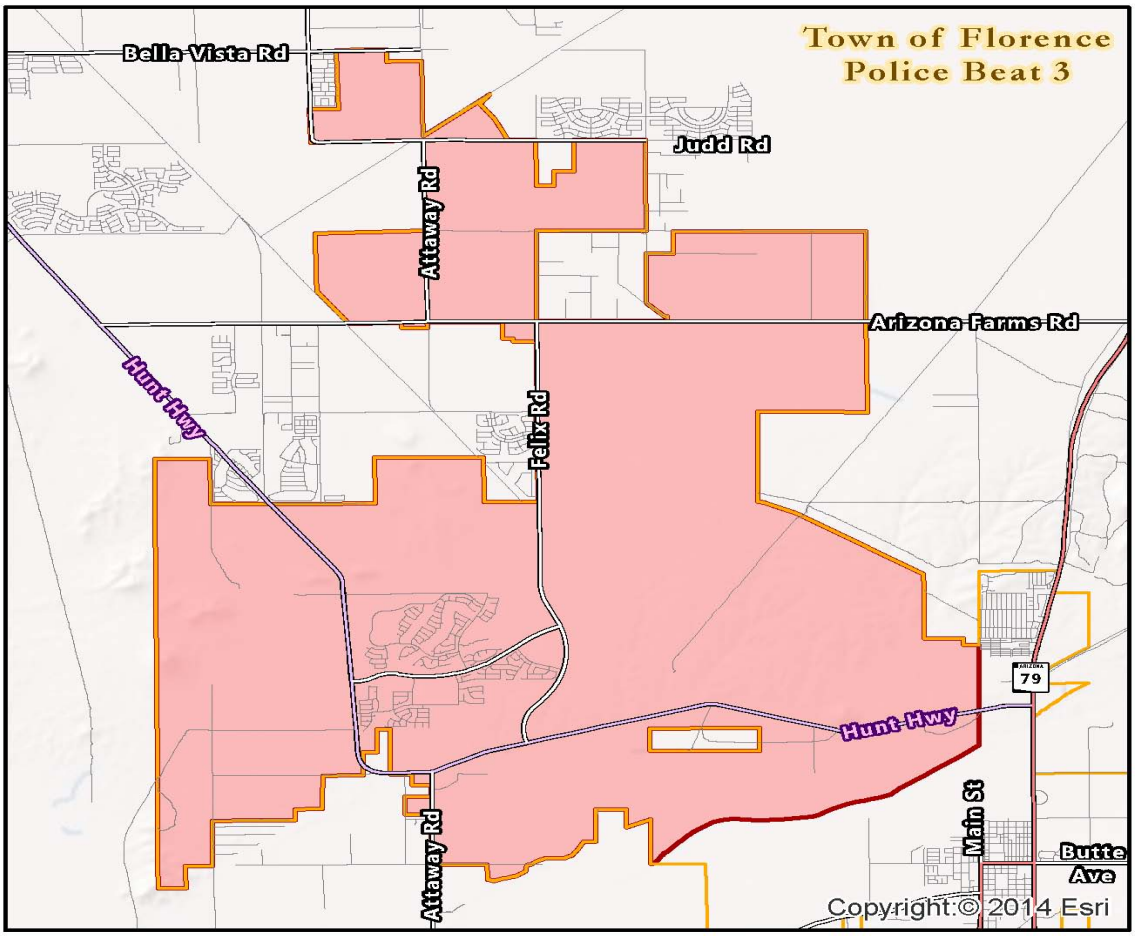

Beat Statistics:
Beat 3 Supervisor – Sgt. S. Morris
There are 6 officers assigned to Beat 3
Total number of calls for service (including traffic): 277
Total number of traffic stops: 152
Total number of accident reports taken: 3
Total number of citations issued: 38 for 66 violations
Total number of DUI: 0

Crimes against Persons:
Domestic: 1
Sex assault: 1

Property Crimes:
Criminal damage: 1
Theft: 1

Monthly Activities
For the month of February, the total calls for service was 277, compared to 346 in January. A 19.94 % decrease. No influx of major crime. A total of 75 directed patrols were conducted.

The Juvenile Detention Log was completed as required by state law. The FPD detained two juveniles for the month of February.

The speed signs logged the following data:

> The Main Street speed sign for southbound traffic. 86,609 vehicles. Average speed was 32 mph. Speed limit is 35 mph. 33,240 were between 33-38 mph. 4,631 were between 39-44 mph, and 367 were 45-50 mph.
>
> Anthem/ Hunt Highway, - The speed sign for westbound traffic. 109,063 vehicles. Average speed was 37 mph. Speed limit is 45 mph. 2383 were between 33-38 mph. 13,053 were between 39-44 mph, and 35,748 were 45-50 mph. 16,236 vehicles were 50 and above.
>
> The portable speed sign #2 was placed on Butte by the prison complex, and #3 was placed on main street extension for north bound traffic for a two-week period.

For the month of February, traffic enforcement in Beat 3 consisted of 152 traffic offenses, with 38 citations, and 66 violations.

Community Involvement and Education
Beat 3 Sergeant Morris met with the Sheriff and Chief Deputy at PCSO in reference to the graffiti abatement program. The service truck is being repaired and an MOU is being put together by PCSO staff.

The beat three officers continue to look for code enforcement violations and have been enforcing parking violations. Only two parking violations given in February. The officers continue to monitor the school zones every morning and afternoon, monitoring traffic, and student pickup and drop-off.

Special Events
None

Upcoming Special Events
None

Significant Calls for Service
W. Desert Blossom Way – A juvenile got in trouble at school and when his mother confronted him about it the juvenile punched several holes in the walls of his home. He was arrested for criminal damage DV and confined at Juvenile detention.

W. Millerton Way – Two juvenile bothers ages 10 and 14 were discovered by their father having inappropriate sexual contact with each other. Case is being handled within the family.

N. Hunt Hwy – A female victim left her bicycle outside of Safeway while she was shopping. When she returned, the bike was gone. After further investigation, the bike was located, and a juvenile male was identified as a suspect. No charges filed. Bike was a $500 Pro GT.

N. Spyglass Dr. – The victim's car was in the driveway, and it was discovered that someone had keyed the front bumper, hood and side of her Chevy Cobalt. No suspects or witnesses.

Two accidents with injuries occurred at Hunt Hwy and Merrill Ranch Pkwy. One was a single vehicle accident whereas the driver had a medical emergency and drove his truck off the road striking a pole. He was transported via ambulance.

A two-vehicle accident occurred at Hunt and Merrill Ranch. Minor injuries.

One other minor accident at Palmer and Attaway. No injuries.

Training
Officer uniforms were inspected this month, with no discrepancies noted.

K-9 Unit

How many officers assigned to K-9 unit: (1) K9 Murphy

Total number of vehicle stops: K9 Murphy 75 vehicle stops

Total number of K-9 Utilizations: K9 Murphy 4 utilizations

Total number of vehicle hand searches: 4

Total amount of narcotic seizures (weight): 7.2 grams

Type of Drug	Amount in Weight
Narcotics	9.8 gram
Prescription Drugs	0
Paraphernalia	10 individual items

Officer Murphy attended weekly K9 detection along with the Pinal County Sheriff's Office K9 Unit Training Unit. Officer Murphy's service dog Rexo, detected marijuana, cocaine, methamphetamine and heroin without incident. Officer Murphy is certified through the National Canine Audit Tracking (NCAT) Systems using K9 Rexo.

During the month of February, K9 Murphy self-initiated (75) cases which included vehicle stops, field interviews and on-view criminal activity.

Traffic Stop: Officer Murphy participated in Operation Stonegarden which is a federal grant to suppress narcotic and human trafficking located in the southwest portion of Pinal County. During a traffic stop in the area of SR84 and White and Parker Road, he located 3.0 grams of methamphetamine. During the investigation, the male driver was deported three prior times for violent felonies. The suspect was processed and booked into Pinal County Sheriff's Office Adult Detention Center without incident.

Traffic Stop: Officer Murphy conducted a traffic stop in the area of Florence Kelvin and Quail Run. During the stop, the odor of marijuana was coming from the vehicle along with information that driver had a valid warrant. The driver was arrested, and Officer Murphy located 4.2 grams of marijuana within the cab of the truck. The driver was arrested, processed and booked into Pinal County Sheriff's Office Adult Detention Center without incident.

School Search: Officer Murphy along with K9 Rexo arrived at Florence K-8 to conduct a school search. During the search a vape pen was located with a THC cartridge. The juvenile was suspended, and contraband submitted into Florence Police Department Evidence Division.

Traffic Stop: Officer Murphy conducted a traffic stop in the area of Hunt Highway and Franklin Road. During the traffic stop investigation, 8 vape cartridges with THC were located. The driver was arrested and processed without incident.

Volunteers

The Florence Volunteers put in a total of 166.25 hours for the month of February. There was a total of 11 volunteers that donated their time this month. The Victim Services Unit was not utilized this month. The volunteers continue to assist the police department with fingerprinting, funeral escorts, and any special events hosted by the Town of Florence. The volunteer program is actively involved in house watches, school zones and business checks. There were eight 3511 hearings this month, conducted by a volunteer. The vehicles were released to their respective owners and tow companies, and a total of $600.00 was collected for fees.

Grants

- GOHS Radars ordered for FY2019
- GOHS FY2020 proposal completed. Requesting the following:
  - $10,000 DUI enforcement overtime compensation
  - $10,000 occupant safety enforcement overtime compensation
  - $15,000 for distracted driving and speed enforcement overtime compensation

The following are statistics reported to GOHS for both special events and sustained (regular) activity:

Total citations for the month of February 2019 -
Total traffic contacts for the month of February 2019 -

Type of Citation	Total Number
Civil traffic	81
Criminal traffic	9
DUI	1
DUI Drugs	0
Other (CT, CR,CV)	8

Training

Efforts are continually made by the training staff to incorporate and provide quality training to all FPD officers. FPD staff has worked diligently to reduce training costs by providing required internal training.

Traffic

Total number of Citations issued for the department: 64 for 100 violations

Directed Patrols
The Police Department conducted 231 directed patrols during February. Directed patrols are a proactive, police-initiated, approach which focuses patrol resources on the places with highest risks of serious crime to increase crime prevention. Statistics have proven that an increased pro-active patrol in high crime areas has decreased crimes.

TOWN OF FLORENCE
PUBLIC WORKS DEPARTMENT
444 N. Warner Street
Florence, AZ 85132
Office: 520-868-7614
FAX: 520-868-7546

MEMO

MEETING DATE: April 1, 2019

STAFF PRESENTER: Christopher A. Salas, Development Services Director/Town Engineer

SUBJECT: Staff Report

Engineering Division:

APS Solar Covered Parking

- Submitted Library/Community Center design proposal for FY'19 consideration
- Would allow APS to construct a 108-space car covered parking area, roof being made of solar panels. Approximate kW yield is 270 kW
- Action pending 2019 eligibility consideration from APS

Kokopelli Moon Saloon – Pre Demolition

- Breinholt Contracting won the bid and Council approved 3.4.2019
- Permit has been pulled
- Adobe Technologies – experts on adobe installation – will need patching

Cuen Building – Pre Demolition

- Asbestos and Lead Paint Testing has been ordered, samples taken, waiting for results

CFD Feasibility

- Wilson & Company – ON CALL Engineers

Cox Irrigation Ditch

- Preliminary ditch design received from EPS, forwarded to SCIDD for review
- 3/4/19 Still waiting on SCIDD
- Pursuing alternative approvals via direct consultation with affected landowners

Anthem at Merrill Ranch

- Unit 52 approved for Letter of Acceptance

Florence Hospital Drainage

- Dibble Eng. in dialog with Baxter Design to assess drainage issues and search for original Drainage Report. Town does not have this report
- 4/1/19 No updates

SCIDD Canal Sunrise Estates

- SCIDD performed aerial survey (UAV) early December, pending survey results to determine Towns participation in resolving severe erosion issues – nothing new to report
- 4/1/19 Still awaiting response from SCIDD
- Approximately 700 cubic yards of soil acquired from FUDS baseball field project and placed on Langley 3 property for use as backfill

CAG EPC (Environmental Protection Committee)

- Next scheduled meeting May 2019

EVIT (East Valley Transportation Committee)

- Next scheduled meeting April 26, 2019

CIP T-60 - E. 1st Street Pavement (HURF Bond)

- Started January 21, 2019
- Project continues on-track despite weather delays

Facilities Maintenance:

Public Works Building

- Fire Suppression System
  - Council approved 1/7/2019
  - Notice to Proceed sent to 315 Fire Protection Services
  - Pre-con scheduled on 1/28/2019
  - Work started 2/19/19
  - Installation complete – final inspection 3.29.2019
- Fleet skylights – Complete

Town Hall

- Materials for French Drain – Complete
- Ceiling work – paint – waiting to schedule
- Remaining carpet replacement – ON HOLD
- Centimark – fix roof leaks – pending funding
- Touch up painting for Customer Service counter – pending funding

Senior Center

- Overhang repair estimated approximately- $5000, pending funding source

Safety Walkthroughs

- Southwest Risk & Town staff completed on 1/10/19, Departments are currently working on addressing identified issues

Community Services Building

- No work scheduled

Fire Station #1

- Touch up painting
    - Hallway, restroom 1111 and kitchen

Fire Station #2

- Apparatus Bay Doors 1 & 3 – received wrong doors, correct on their way

Fitness Center

- Roof – Completed
- Electrical Panel – Completed
- Fire Alarm – scheduled for late March
- Ceiling work – paint – waiting to schedule
- Flooring – obtaining updated proposal

Police Department

IT Building

Silver King

- Motley Design Group – providing egress designs
    - Electric
    - Fire suppression
    - Door hardware
- Budgetary figures for repairs and deck surface have been received with exception of optional budgetary figures for stamped/colored concrete for west deck

McFarland

- Fire panel – Completed

Fleet Services:

Monthly Work Orders

- Preventative Maintenance (PM's) – 13
- Other Services – 37
- Total vehicles serviced – 50

Streets (HURF) Division:

Roads

- Crack sealing streets in prep for HA5 Project

- Patched potholes
- Blading drainage ditches throughout Town

Hunt Highway Project

Water Division:

SCADA Upgrade

- To coordinate between well sites
- Fill tanks at night for energy savings
- Need operational plans and programming

Well Meter Calibration

- Professional testing of well meters – COMPLETED – Tested Accurate

WIFA

- Staff attended 2-day training session for Water Loss

Wastewater Division:

SWWTP SAM Rebuild

- Electrician assessed

SWWTP Maintenance

- Pista Grit – waiting for parts

NWWTP Maintenance

- 3/4/2019 – Western Environmental – headworks delivery still pending

Sanitation:

RAD Service Orders

- Town 33 pickups of bulk trash
- Florence Gardens 37 pickups of bulk trash
- Anthem had 102 pickups of bulk trash

Capital Improvement Projects:

CIP GG-25 - Silver King Balcony Repairs

- Motley Design Group – providing egress designs
    - Electric
    - Fire suppression
    - Door hardware
- Budgetary figures for repairs and deck surface have been received with exception of optional budgetary figures for stamped/colored concrete for west deck

CIP GG-26 - Signal Light @ SR79 & Hunt Highway

- ADOT Traffic study is complete

- Meeting to occur with ADOT to discuss project options
- 3/4/2019 No new updates

CIP GG-29 – Territory Square Expansion – Phase 1

- Extend 8" waterline within Main Street @ Town Hall
- Funds not available until FY 19/20

CIP PSP-18 - HVAC @ Police Department

- Three units replaced after failures in FY16/17, remaining two are newer and are not scheduled for replacement in 17/18

CIP SU-06 – Wastewater Main Extensions & Replacements

- Funds not available in FY 18/19, budget being reviewed

CIP SU-13 – Wastewater Main Extension (Main Interceptor / Lift Station) NORTH

- Bar Screen and Compactor on order as of 10/19/18
- Grit chamber will remain

CIP SU-20 – Recharge Facility

- Council approved on 1/7/2019
- Notice to Proceed sent to Scholz Contracting and Jayco (Earth Moving)
- Project started 1/22/2019
- 2/14/19 Earthwork COMPLETED by Jayco
- 3/4/19 Scholz to start piping work mid March

CIP SU-83 – SCADA Tie-Ins – Wastewater Controls

- SOW provided 9/13/18
- As of 3/4/19 – Under review, searching for alternatives

CIP SU-84 – Wastewater System Preservation

- Ongoing

CIP SU-85 - Recharge Permitting & Design

- Design underway, permit application
- ADWR Meeting June 26, 2018

CIP SU-88 – SWWTP Expansion Headworks

- 10/19/18 – Construction documents to be submitted
- Meeting with Engineering consultant and town – plans under review
- Will be a formal bid solicitation
- 3/4/2019 No updates

CIP SU-89 – WWTP Compliance / Permitting Equipment

- Ongoing

CIP SU-90 – SWWTP Improvement Modifications

- Waiting for Bar Screen parts to arrive
- Project ongoing

CIP T-12 – Butte Avenue Bridge Replacement

- 11/9 Certified letter to all utilities

CIP T-14 – Roundabout / Intersection Improvement SR 79B & SR287

- MAG close out funds

CIP T-28 – Hunt Highway Fire Station #2 Traffic Signal / Turn Lane

- 1st Phase design completed & reviewed
- 11/7/18 – Bid Tab approved to complete the next stage – Lee Engineering $10,925
- 4/1/2019 Pavement – Regional – RCA to Council 4/15/2019

CIP T-41 – Pinal Street Drainage (aka Main Street Butte to Ruggles Ditch)

- Formal bidding process followed
- Notice to Proceed and project started by T Y Lin

CIP T-60 - E. 1st Street Pavement (HURF Bond)

- Approved by Council on 10/15/2018 – Regional Pavement

CIP WU-23 - 2B Outfitting

- Approved by Council on 11/5/2018 – Coolidge Engine & Pump
- Work Completed – pending final testing

CIP WU-25 – Water Line Relocation

- Relocate 12" water line outside of INS property
- Funds not available until FY 22/23

CIP WU-38 - Water Line Replacements

- Westland Resources to complete design, ADEQ permitting, utility location and construction documents
- 8" Water Line Extension (Elizabeth – Virginia – Orlando) – JOC Contract with Pine/Strawberry – Apache Underground
- Approved by Council on 11/5/2018 $813,696.00 – Apache Underground
- Work has started

CIP WU-74 – Transmission Line & Pressure Zones

- Report on feasibility of project and pump curves due by 11/1/2018

CIP WU-83 – Downtown 12" Loop (CBDG)

- Approved by Council on 10/15/18, Notice to Proceed to Apache Underground
- Work almost completed

CIP WU-84 – Well #4 Pump Inspection and Rebuild

- KP Ventures – Rebuild portion of project – Testing Completed

CIP WU-85 – Hydrant Replacement

- Replace aging fire hydrants
- Cooperative utilized for parts, Council approved on 5/21/2018
- Work being completed in-house
- Project is on-going

CIP WU-86 – 8" Line Extension (410 feet) Willow to High School

- 7/1/2018 – Project ON HOLD until 3rd quarter FY 18/19

CIP WU-87 – Line Extension on Adamsville Road (Quartz to 79B)

- 9/18/18 Project COMPLETED – line was extended to hydrant

CIP WU-88 – Well Preservation

- Well #5 – Cannot start until Well #4 is back on line